RESTRICTED

Army Code No71284
D/HQDT18/28/132
Revised 1996

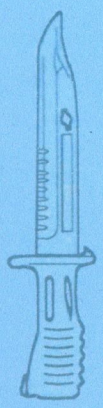

Infantry Training
Volume VI
Infantry Heavy Weapons
(Anti-Armour)

Pamphlet No. 27

The MILAN Weapon System

RESTRICTED

1996

SECURITY WARNING NOTICE

THIS DOCUMENT IS THE PROPERTY OF HER BRITANNIC MAJESTY'S GOVERNMENT, and is issued for the information of such persons only as need to know its con tents in the course of their official duties. Any person finding this document should hand it into a British Forces unit or to a police station for its safe return to the MINISTRY OF DEFENCE, SY, LONDON SW1 2HB, with particulars of how and where found. THE UNAUTHORIZED RETENTION OR DESTRUCTION OF THE DOCUMENT IS AN OFFENCE UNDER THE OFFICIAL SECRETS ACTS OF 1911-1989. (When released to persons outside Government service, this document is issued on a personal basis and the recipient to whom it is entrusted, in confidence, within the provisions of the Official Secrets Acts 1911-1989, is personally responsible for its safe custody and for seeing that its con-tents are disclosed only to authorized persons.

CONDITIONS OF RELEASE

(Applicable to copies supplied with Ministry of Defence approval to Commonwealth and Foreign Governments)

1. This information is released by the United Kingdom Government to the recipient Government for Defence purposes only.
2. This information must be accorded the same degree of security protection as that accorded thereto by the United Kingdom Government.
3. This information may be disclosed only within the Defence Department of the recipi-ent Government, except as otherwise authorized by the Ministry of Defence (Army).
4. This information may be subject to privately owned rights.

AMENDMENTS

Amdt No	Date	Amdt No	Date	Amdt No	Date

DISTRIBUTION

(See page v)

FOR THE ATTENTION OF ALL SCALE HOLDERS

Units requiring amendments to their scales should apply to CSE 3c, Llangennech who will arrange for a revised distribution. Any proposals to exceed the A-F scale must first be referred by CSE 3c, Llangennech to the sponsor. Further information regarding the issue of publications is contained in the Catalogue of Army Publications Part II (Army Code No. 12123) and in Command etc., Standing Instructions and Routine Orders. In order to achieve maximum efficiency in the management of transactions, Units should nominate a responsible Publications Control Officer.

RESTRICTED

Army Code No. 71284
(Revised 1996)
D/HQDT/18/28/132

Infantry Training Volume VI

Infantry Heavy Weapons (Anti-Armour)

Pamphlet No. 27

The MILAN Weapon System

Prepared under the direction

of the Chief of the General Staff

Ministry of Defence

January 1996

Crown Copyright Reserved

RESTRICTED

1996

FOREWORD

Any person wishing to propose amendments to this pamphlet should forward details to the Chief Instructor of Anti-Tank Division, Infantry Training Centre, Warminster, Wiltshire, BA12 0DJ. All proposals will be given consideration, and if there is a requirement for them the appropriate amendments will be prepared and submitted to Headquarters Infantry for approval and publication.

This pamphlet supersedes Infantry Training, Volume VI, Infantry Heavy Weapons (Anti-Armour), Pamphlet No. 27 MILAN MRATGW 1986. Army Code No. 71284.

DISTRIBUTION

(See Catalogue of Army Publications Part II)

Regular Army:

Infantry	Scale C + 14 copies
Anti-Tank Division, ITC	150 copies

Territorial Army:

Infantry	Scale C + 14 copies

Royal Marines	Scale C + 14 copies

TECHNICAL DETAILS — MILAN

Performance

Range.	Warhead Armed, 20 metres. Minimum Range, 400 metres. Maximum Range, 1950 metres.
Velocity.	75–210 metres per second, according to distance travelled.
Time of Flight.	Approximately 12 seconds at maximum range.
Tracking Rate.	20 mils per second, maximum.
Elevation Range.	± 180 mils from horizontal.
Azimuth Range.	6400 mils.

Dimensions and Weight

Firing Post and Tripod.	0.90 x 0.42 x 0.65 metres. 17.68 kilogrammes.
Firing Post and Tripod in Logistic Container.	1.00 x 0.60 x 0.50 metres. 60 or 65 kilogrammes, depending on country of manufacture.
Missile, Fins Folded.	Length, 0.77 metres. Diameter of J103. Warhead 0.103 metres, K115. Warhead 0.115 metres. J103 — 6.65 kilogrammes. K115 — 7.83 kilogrammes.
Ammunition Tube.	Length, 1.20 metres. Diameter, 0.113 metres. 12.25 kilogrammes.
Four Ammunition Tubes in Logistic Container.	1.30 x 0.54 x 0.50 metres. J103 — 82 kilogrammes. K115 — 84 kilogrammes.

Miscellaneous

Tracker Field of View.	150 mils.
Goniometer Sensing Field.	80/20 mils.
Magnification.	x 7.
Tripod Height (maximum).	0.50 metres.
(minimum).	0.30 metres.
Warhead Weight.	J103 — 2.70 kilogrammes. K115 — 3.88 kilogrammes.
Explosive Weight.	J103 — 1.45 kilogrammes. K115 — 2.63 kilogrammes.
Warhead, Stand Off Distance.	J103 — 257.5 millimetres. K115 — 371.4 millimetres.

TECHNICAL DETAILS — MILAN INFRA RED ADAPTOR (MIRA)

Performance

Detection Range AFVs.	Good Conditions	— 3 kilometres 100% probability at 2 kilometres.
	Bad Conditions	— 84% probability at 2 kilometres.
Recognition Range AFVs.	Good Conditions	— 90% probability at 1.5 kilometres.
	Bad Conditions	— 71% probability at 1.5 kilometres.
Identification Range AFVs.	Good Conditions	— 72% probability at 1.2 kilometres.
	Bad Conditions	— 61% probability at 1.2 kilometres.
Bottle (0.33 litre).	Continuous running time — 2 hours approximately.	
Batteries.	3 cell Lithium Battery	— 2 hours.
	6 cell Lithium Battery	— 4 hours.
Operating Temperature. Limitations.	MIRA	— –40°C to + 52°C.
	Bottles	— –40°C to + 40°C.
	Lithium Batteries	— –40°C to + 40°C.

Data — MIRA

Operating Wavelengths.	8–13 micron.
Field of View.	106 x 53 mils.
Angular Resolution.	0.175 milliradians.
Thermal Resolution.	0.16°C.
Image Frequency.	20 Hz.
Magnification.	x 1.
Display.	Red light emitting diodes.
Start up Time.	30 seconds.
Harmonization of Axes.	1.0 milliradian.
Power Consumption.	7.5 volts DC — 4 ampere/hours.

Data — Cooler

Type.	High pressure pure air at nominal maximum pressure of 414 bar approximately at 20°C.
Cooler.	Joule Thompson mini cooler.
Cool Down Temperature.	–196°C approximately.

CONTENTS

	Page
Foreword	v
Technical Details — MILAN	vi
Technical Details — MIRA	vii
Contents	ix
Illustrations	xi
Associated Publications, Films and Videos	xv
Abbreviations	xvi
Glossary	xvii
Introduction	xxi
Destruction/Abandoning Drills	Inside rear cover

CHAPTER 1. — THE SYSTEM

Lesson 1. — MILAN Characteristics	1–1
Lesson 2. — MIRA Principle of Operation and Characteristics	1–7
Lesson 3. — The Firing Post and Logistic Container	1–19
Lesson 4. — MIRA and Tactical Container	1–29
Lesson 5. — Ammunition and Logistic Container	1–47
Lesson 6. — Firing Sequence and Basic Guidance	1–61

CHAPTER 2. — WEAPON DRILLS

Introductory Notes	2–1
Lesson 7. — Target Selection and Aiming	2–3
Lesson 8. — MIRA Fitting and Operation	2–19
Lesson 9. — Introduction to Drills	2–31
Lesson 10. — Action and Cease Firing	2–51
Lesson 11. — Firing and Action on Misfire	2–55

CHAPTER 3. — MAINTENANCE

Lesson 12. — Storage and Maintenance	3–1
Lesson 13. — Unit Tester Mk 1	3–13
Lesson 14. — Unit Tester Mk 2	3–25
Lesson 15. — Harmonization	3–39
Lesson 16. — MIRA Harmonization	3–63

Page

CHAPTER 4. — THE SIMULATOR

Lesson 17. — General Description — Simulator 4–1
Lesson 18. — Assembling and Dismantling the Simulator 4–17
Lesson 19. — Uses of the Simulator and Battery Charging 4–29
Lesson 20. — Uses of the Simulator with MIRA 4–37
Lesson 21. — Battle Cards, Coordination Templates and Coordination Boards 4–49

CHAPTER 5. — TRAINING

Section 1. — General 5–1
Section 2. — Tactical Training 5–1
Section 3. — Helicopter Handling 5–7
Section 4. — Fire Control Training 5–7
Section 5. — Battle Exercises and Tests 5–31
Section 6. — Conduct of Annual Weapon Tests 5–53
Section 7. — Training MILAN Operators/NCOs 5–54
Section 8. — Training Aids 5–55

CHAPTER 6. — AFV IDENTIFICATION TRAINING

Section 9. — General Introduction 6–1
Section 10. — AFV Identification Standards 6–1
Section 11. — Principles of AFV Instruction 6–2
Section 12. — Notes for the Instructor 6–2
Section 13. — Aids to Instruction 6–3
Section 14. — Preliminary Lesson on Classification 6–11
Section 15. — Unit AFV Syllabus Notes 6–12
Section 16. — AFV Identification Using Thermal Image 6–16
Section 17. — Continuation Training 6–17
Section 18. — Sources for AFV Identification Training Material . 6–21

CHAPTER 7. — BATTLE AND TACTICS PROCEDURE

Section 19. — General 7–1
Section 20. — Planning the Anti-Armour Defence 7–1
Section 21. — MILAN Siting Considerations 7–5
Section 22. — Fire Control 7–10

Page

ANNEXES AND APPENDICES

A	Recommended Sequence of Instruction	A–1
	Appendix 1. The Practice Period	A1–1
B	Simulator Training	B–1
	Appendix 1. Simulator Training Practices	B1–1
	Appendix 2. Sight Control Unit Settings	B2–1
C	Alternative Vehicle Drills	C–1
D	Annual Weapon Tests	D–1
	Appendix 1. Details of Tests	D1–1
	Appendix 2. Simulated Firings	D2–1
E	Servicing Schedule, Unit Test Equipment	E–1
F	Theory of Thermal Imagery	F–1

ILLUSTRATIONS

Figure

1.	MILAN in Action	xix
2.	Effect on Armour, NATO Triple Target	1–5
3.	Rear Blast Area	1–6
4.	Effect of Rain on EMR	1–15
5.	MIRA System Layout	1–16
6.	Scanner and Detector Array	1–17
7.	Application of MIRA to MILAN	1–18
8.	Firing Post Logistic Container	1–25
9.	Firing Post Logistic Container, Lid Removed	1–26
10.	Firing Post Logistic Container, Top Pad Removed	1–26
11.	Firing Post Logistic Container, Centre Pad Removed	1–27
12.	Tripod	1–27
13.	Underside of the Guidance Electronics Pack	1–28
14.	Firing Post	1–28
15.	MIRA Tactical Container	1–39
16.	MIRA	1–40
17.	MIRA Mounting Bracket	1–41
18.	Air Bottles and Tactical Containers	1–42
19.	Lithium Batteries	1–43
20.	24 Volts DC to DC Converter	1–44
21.	Carrying Bag	1–45
22.	Ammunition Logistic Container Markings (103 mm Warhead)	1–55
23.	Ammunition Logistic Container Markings (K115 Warhead)	1–56

Figure **Page**

24. Ammunition Tube Markings (103 mm Warhead) 1–57
25. Ammunition Tube Markings (K115 Warhead) 1–58
26. Ammunition Tube and Missile, Sectionalized (103 mm Warhead) 1–59
27. Ammunition Tube and Missile, Sectionalized (K115 Warhead) 1–60
28. Second Safety 1–67
29. Third Safety 1–68
30. Missile Launch Sequence 1–69
31. Goniometer Sensing Fields 1–70
32. Basic Guidance 1–71
33. Missile Flight 1–72
34. The Reticle 2–9
35. Dimensions, Average Main Battle Tank 2–10
36. Head On Target, 2000 metres 2–11
37. Direct Crossing Target, 2000 metres 2–12
38. Diagonal Crossing Target, 2000 metres 2–13
39. Target Out of Range 2–14
40. Point of Aim 2–15
41. Pre-Aiming 2–16
42. Re-Aiming 2–16
43. The 75 mil Rule 2–17
44. 'Aim Off' to Combat Decoy Danger 2–18
45. Attaching the Mounting Bracket 2–27
46. Attaching MIRA to the Mounting Bracket 2–28
47. Warning Indicators 2–29
48. External Power Supply Connected 2–30
49. Stowage and Seating, 1 Tonne 2–39
50. Firing Posts and MIRA Secured in the Vehicle 2–40
51. Fall In Positions 2–41
52. Positions in the Vehicle 2–41
53. Shoulder Carry, Front 2–42
54. Shoulder Carry, Rear 2–43
55. Cradled, Tripod Legs Open 2–44
56. Cradled, Tripod Legs Closed 2–45
57. Using the Carrying Handle 2–46
58. Using the GS Carrier 2–47
59. Ammunition Layout 2–48
60. No. 1's Action Position 2–49
61. Fitting the Ammunition Tube 2–50
62. Ammunition Tube Loaded 2–50

Figure **Page**

63. The Unit Tester Mk 1 3–21
64. The Lid, Interior 3–21
65. The Junction Box 3–22
66. The Collimator 3–22
67. The Body 3–23
68. External Power Source Connections 3–23
69. The Battery Pack 3–24
70. The Unit Tester Mk 2 3–35
71. The Lid, Interior 3–35
72. The Junction Box 3–36
73. The Collimator 3–36
74. The Body 3–37
75. External Power Source Connections 3–37
76. The Battery Pack 3–38
77. The Harmonizing Target 3–49
78. The Sighting Gauge and Case 3–50
79. Sighting Gauge Reticle 3–51
80. Sighting Gauge Fitted 3–52
81. Tracker/DAP 3–53
82. Sighting Gauge/DAP 3–54
83. Checking Firing Post Upright Through Sighting Gauge 3–55
84. Sighting Gauge/Harmonizing Target 3–56
85. Tracker/Harmonizing Target 3–57
86. Bolts 3–58
87. Bolt 2 3–59
88. Bolt 3 3–59
89. Bolt 2, Use of Tools 3–60
90. Vertical Alignment Correct 3–61
91. Vertical Alignment Incorrect 3–62
92. Effect of Bad Harmonization 3–67
93. Tracker Aligned to DAP 3–68
94. Assessing Harmonization 3–69
95. Corrected Aiming 3–70
96. Simulator Logistic Containers 4–9
97. Container No. 1/2 and Contents 4–10
98. Container No. 2/2 and Contents 4–10
99. Computer Control Panel 4–11
100. Simulator Junction Box 4–12
101. Battery Charger 4–13
102. Sight Control Unit 4–14

Figure **Page**

103. The Optical Unit 4–15
104. The Supporting Bracket 4–15
105. The Instructor's Eyepiece 4–16
106. The Supporting Bracket Fitted 4–23
107. The Optical Unit Fitted 4–24
108. The Instructor's Eyepiece Fitted 4–25
109. Tracker Cross Hair/Aiming Point 4–26
110. Spot Adjustment/Tracker 4–27
111. Spot Adjustment/Instructor's Eyepiece 4–27
112. The Mounting Assembly 4–44
113. The Observer's Adapter 4–45
114. Attaching the Mounting Assembly 4–46
115. Attaching the Observer's Adapter 4–47
116. Example of a Completed Battle Card 4–55
117. Example of a Completed Coordination Template 4–56
118. MILAN — Direct Fire Weapon Effects Simulator 5–5
119. Specification for a Moving Target Fire Control Board 5–27
120. Layout for a Fire Control Exercise 5–28
121. Okeefe Trainer. 5–29
122. Okeefe Trainer. 5–30
123. Manufacture of a Drill Missile Tube — Stage 1 5–61
124. Manufacture of a Drill Missile Tube — Stage 2 5–62
125. Manufacture of a Drill Missile Tube — Stage 3 5–63
126. Simulator CCTV Monitor Interface Bracket 5–64
127. Use of the Field Miniature Range Equipment 5–65
128. Main AFV Identification Features 6–5
129. Symbols for Preliminary AFV Identification Lesson 6–6
130. The Logic Tree, AFV Identification Instructor's Aid 6–7
131. AFV Identification Rough Sheet 6–8
132. AFV Data Sheet 6–9
133. AFV Observation Exercise/Test Layout 6–19
134. The Okeefe Trainer B–7
135. Simulator Training Pattern Board B–8
136. Positions in the FV 432 . . . . . C–5
137. Fall in Positions, FV 432 . . . . . C–5
138. Positions in the ¾ ton Vehicle C–6
139. Fall in Positions, ¾ Vehicle C–6
140. The Electro Magnetic Spectrum F–3

ASSOCIATED PUBLICATIONS AND FILMS

Code No./Reference	Title
Publications:	
71080	Infantry Training Volume IV, Ranges, Pamphlet No. 21, Range Conduct and Safety Rules (All Arms) 1992.
71053	Infantry Training Volume IV, Ranges, Pamphlet No. 22, Range Construction and Regulations (All Arms) 1976.
70670	Instructional Technology, Pamphlet No. 3, The Writing of Training Objectives 1982.
71182	Infantry Training Volume I, Skill at Arms (Individual Training), Pamphlet No. 3, Battle Lessons and Exercises (All Arms) 1982.
71290	Training for War, Pamphlet No. 3, Collective Training.
70746	Helicopter Aide Memoire.
ATP 49	(Allied Tactical Publication) Use of Helicopters in Land Operations.
71490	Directive for Infantry Employments (DIE).
	Army Training Directive No. 9, Recognition Training.
Forms:	
B 9922	MILAN Battle Card.
Films:	
C 1407	MILAN (Weapon characteristics and role in the anti-armour plan. 18 minutes) (Obsolescent).
C 1586	An Introduction to Thermal Imagery 1984 (27 minutes).
C 1672	MILAN Part 1. The Weapon System (17 minutes).
C 1673	MILAN Part 2. Tactical Deployment (17 minutes).
0443	MILAN Section Organization (School of Infantry Production).

ABBREVIATIONS

AC	alternating current
AFV	armoured fighting vehicle
Ah	ampere hour
APDS	armour piercing discarding sabot
ATP	Allied Tactical Publication
BHE	battle handling exercise
BITE	built in test equipment
C	celsius
CAP	corrected aiming point
CEPA-F	charging equipment pure air — field
CEPA-T	charging equipment pure air — transportable
CES	complete equipment schedule
CVR(T)	combat vehicle reconnaissance (tracked)
DAP	distant aiming point
DC	detachment commander/direct current
EMR	electro magnetic radiation
EMS	electro magnetic spectrum
FFE INSTRUCT	free from explosives, instructional
FOV	field of view
HEAT	high explosive anti-tank
IR	infra-red
LED	light emitting diode
MBT	main battle tank
MILAN	missile infantry light anti-tank
MIRA	MILAN infra-red adaptor
mm	millimetres
MRATGW	medium range anti-tank guided weapon
NATO	North Atlantic Treaty Organization
psi	pounds per square inch
PSU	power supply unit
TI	thermal image/imaging

GLOSSARY

1. ***Acquisition.*** The phase in flight of a missile beginning when it is first brought under the influence of guidance and ending when full guidance is achieved.

2. ***Air.*** The means by which the detector is cooled (pure air).

3. ***Arming.*** As applied to explosives, the changing from a safe condition to a state of readiness for initiation.

4. ***Bar.*** A measure of atmospheric pressure.

5. ***Battle Card.*** A flexible piece of plastic which allows the user to see at a glance all the information he needs to engage the enemy. Army Form B 9922.

6. ***Co-ordination Template.*** A flexible piece of plastic which allows the MILAN Section Commander, and the MILAN Platoon Commander to see at a glance whether anti-armour coverage has been achieved and, if not, where the weaknesses in the plan lie. Army Form B 9922.

7. ***Dead Ground.*** Ground within a killing area which cannot be seen when viewed through the tracker.

8. ***Decoy.*** The effect of the tracker becoming confused over which infra-red source it is following — the missile flare or the decoy source. If it selects the decoy source, the missile is decoyed from the target.

9. ***Detection.*** The discovery of a potential target.

10. ***Detector.*** A device which is extremely sensitive to temperature differentials.

11. ***Far Limit.*** A line 1950 metres or less from the firing post, beyond which MILAN cannot engage. It must be recorded on the battle card and known on the ground.

12. ***Fire Control.*** The control of fire to ensure the maximum effectiveness of each missile.

13. ***Germanium.*** A rare metal that is used in the construction of certain types of lenses and will permit EMR to pass through it.

14. ***Goniometer.*** Instrument for measuring angles.

15. ***Go/No Go.*** A form of test which is either positive or negative, thus allowing no discretion to the operator.

16. ***Guidance.*** The functioning of the guidance system.

17. ***Guidance Control Wire.*** The link between the missile and the command station through which information is passed from the missile to the command station and from the command station to the missile.

18. ***Guidance System (Missile).*** A system which evaluates flight information, correlates it with target data, determines the desired flight path of the missile and communicates the necessary commands to the missile flight control system.

19. ***Guided Missile.*** An unmanned vehicle moving above the surface of the earth, whose trajectory or flight path is capable of being altered by an external or internal mechanism.

20. ***Identification.*** The determination of true character of target (e.g., T72, BMP, BRDM2).

21. ***Infra-Red.*** Electro magnetic radiation invisible to the naked eye emitted particularly by hot objects.

22. ***Killing Area.*** An area selected as suitable to kill AFVs. It is defined by the left and right of arc and the near and far limits.

23. ***Micron.*** One millionth part of a metre.

24. ***Milliradian.*** A measurement of angle.

25. ***Near Limit.*** A line about 400 metres from a firing post representing the distance at which a missile will be on its correct flight path, or the closest distance beyond which an enemy AFV can be engaged. It must be shown on the battle card and known on the ground.

26. ***Priority of Engagement.*** The order in which enemy AFVs are to be engaged.

27. ***Recognition.*** The determination of class (e.g., tank, APC, wheeled vehicle) of target.

28. ***Reticle.*** A mark such as a cross or a system of lines lying in the image plane of a viewing apparatus.

29. ***Seventy Five Mil Rule.*** If a target does not have an engageable run of 75 mils before going into cover it should not normally be engaged.

30. ***Warhead.*** The part of a missile which contains high explosive or inert materials intended to inflict damage.

Fig 1. — MILAN in Action

INFANTRY TRAINING

Volume VI — INFANTRY HEAVY WEAPONS (Anti-Armour)

Pamphlet No. 27

THE MILAN WEAPON SYSTEM

INTRODUCTION

Scope of the Pamphlet

1. This pamphlet contains the information and instructional data which an instructor will need to train the soldier as a member of a detachment in the technical and battle handling of MILAN in the infantry or mechanized role of a battalion, and in a Commando RM.

2. Voice procedure, radio operation and map and air photograph reading are not dealt with in this pamphlet. However, all ranks employed in the MILAN platoon must be able to operate the radio sets used, be familiar with voice procedure and be trained to read maps and air photographs accurately and quickly. These, together with the basic infantry skills and the ability to identify instantly all types of British, allied and potential enemy armoured fighting vehicles, are essential requirements for MILAN operators.

3. Each member of the detachment, including the driver/operator should be trained in all duties and all should be able to drive so that in the event of casualties the detachment is not immobilized and can still operate effectively.

Aim of the Pamphlet

4. The aim of the pamphlet is to assist instructors to achieve a high standard of training which will enable detachments in war to locate, identify and destroy any enemy AFVs that appear in range and within their killing area.

Layout of the Pamphlet

5. The first four chapters are written in lesson form, each of which deals with a certain aspect of training. Chapters 5–7 are concerned with warning and battle procedure, and are designed to give guidance to commanders.

6. Each lesson is divided into two parts:

a. *Part A — Instructor's Notes.* This contains the information required by the instructor to prepare for the lesson.

b. *Part B — Conduct of the Lesson.* This contains the matter to be taught and is laid out in a proven sequence.

Organization of Instruction

7. ***Sequence.*** A recommended sequence of instruction for training MILAN teams is given in Annex A.

8. ***Size of Squads.*** Soldiers undergoing MILAN training should be organized in squads of preferably no more than 10 men for all practical periods, e.g., weapon drills, maintenance,simulator, etc. Lessons 1 and 2 are best given by an officer or SNCO with squads grouped in one lecture room.

9. ***Timings.*** The timings quoted in the Instructor's Notes for each lesson are based on the time needed to teach the basic facts of the lesson and allow for limited practice.The timings have been calculated for squads of the recommended size with soldiers of average aptitude. It may be necessary, in some instances, to include more practice periods before the required standard of training is achieved.

10. ***Night Training.*** All aspects of training must be practised at night, emphasis being laid on efficiency of operation and silence.

11. ***Simulator Training.*** The MILAN simulator provides units with realistic low cost training. A suggested programme of initial simulator training is provided at Annex B. This programme should be used as a foundation to firing training and should be followed by a varied spot simulator programme using the aids described in Annex B. All soldiers should fire 150 spot simulated missiles prior to annual live firing. When using MIRA simulator attachments, training must be conducted against vehicle targets, ideally, tracked vehicle targets. Depending on the target range and thermal conditions only the hottest parts of the vehicle (engine, exhaust and tracks) may be visible. Particular emphasis must be placed on correct points of aim in relation to target signature. Initially this will require careful monitoring by the instructor.

12. ***Range Safety.*** Regulations for the construction and use of ranges and the conduct and safety rules for range practices are contained in Infantry Training Volume IV, Ranges, Pamphlet No. 21, Range Conduct and Safety Rules 1992 and Pamphlet No. 22, Range Construction and Regulations (All Arms) 1976. (Army Code Nos. 71080 and 71053 respectively.) (Pamphlet No. 22 is soon to be replaced with JSP 403 Volumns 1 and 2.)

Chapter 1

THE SYSTEM

LESSON 1. — MILAN CHARACTERISTICS

A. INSTRUCTOR'S NOTES

0101. ***Aim.*** *To teach the characteristics of the MILAN Medium Range Anti-Tank Guided Weapon.*

0102. ***Timings.*** *One 40 minute period.*

0103. ***Method.*** *Lecture. An officer or SNCO instructor with preferably not more than 50 in the class.*

0104. ***Stores.*** *Prepared drops, vufoils, slides and equipment to illustrate the lesson. MILAN films (either Code Nos. C1407 or C1672 and C1673).*

0105. ***Miscellaneous.*** *The two films (Code Nos. C1672 and C1673) should be used whenever possible. The film (Code No. C1407) is still available and can be shown although it has been superseded by Code Nos. C1672 and C1673. A qualified instructor should be present, whichever films are shown, to explain the latest developments and changes in doctrine since production.*

B. CONDUCT OF THE LESSON

Introduction

0106. *Explain:* A thorough knowledge of the characteristics and the advantages and limitations of MILAN are essential if the weapon system is to be used to its greatest effect.

0107. *Explain:* MILAN *(see* Fig 1) is an infantry semi-automatic wire guided anti-tank missile. It is a second generation MRATGW and is crew portable. The MILAN system comes in three main parts, the firing post, the ammunition tube and the MILAN Infra-Red Adaptor (MIRA). The missile is fired from the firing post which contains the tracking and guidance system, and the missile, once launched, is then semi-automatically slaved to the line of sight and therefore easier to control than SWINGFIRE or VIGILANT. The firer keeps two cross hairs in the sight aligned on the target and corrective commands are automatically fed to the missile to keep it on its correct flight path, i.e., 0.5 metres above the line of sight. The sight has a simple pattern to indicate whether the target is within range or not. There is no separation facility. MIRA is a thermal imaging sight which is an integral part of the equip-

ment. MIRA is dealt with in Lesson 2. — MIRA Principles of Operation and Characteristics.

Advantages

0108. ***Range.*** *Explain:*

a. The missile is armed at 20 metres and initially follows a ballistic trajectory.This makes it possible in emergencies, to engage a target between 20 metres and75 metres. Hits on a target between 75 metres and 300 metres are unlikely due to the initial automatic command signals received by the missile.

b. The minimum planning range is 400 metres. However, there is a good possibility of a hit when engaging targets between 300 and 400 metres.

c. The maximum range is 1950 metres.

0109. ***Accuracy.*** *Explain:* Because of the semi-automatic nature of the system, MILAN has a very high degree of accuracy against all types of targets. Accuracy is slightly diminished beyond 1800 metres.

0110. ***Effect on Armour.*** *Explain:* On introduction the MILAN missile was fitted with a 103 millimetre HEAT warhead that defeated the NATO triple target and penetrated on average four plates in the complementary target *(see* Fig 2) at an angle of impact of 65 degrees (1155 mils).Since the NATO target is designed to represent the heaviest known armour, then MILAN should defeat all present day AFVs. With the introduction of the K115 warhead penetration will be further improved.

0111. ***Concealment.*** *Explain:* With its small size and low silhouette, MILAN is very easy to conceal and the missile has comparatively little signature in flight.

0112. ***Portability.*** *Explain:* The three parts of the system are readily portable. The firing post weighs approximately 18 kilogrammes and the MIRA weighs approximately 9 kilogrammes with an air bottle and battery fitted. These are carried by one man. The ammunition tube weighs approximately 12 kilogrammes and one man can carry two missiles. Because of the lightness and compactness of the system it readily lends itself to helicopter and air drop operations.

0113. ***Flexibility.*** *Explain:* MILAN can be used in the open or fired from a trench and under overhead protection. It can be fired from the prone, standing, sitting or kneeling position, and can be mounted on and fired from various vehicles. The firing post has a traverse of 6400mils.

0114. ***Pre-Firing Checks.*** *Explain:* A simple, visual pre-firing inspection is required on the MILAN ammunition tube. The firing post can be tested by non technical operators by using a simple 'Go/No Go' unit tester.

Limitations

0115. ***Time of Flight.*** *Explain:* At maximum range the time of flight is approximately 12 seconds. This precludes the engagement of fleeting targets and results in a relatively slow rate of fire. It necessitates the firer being protected during target engagement.

0116. ***Rear Blast Area.*** *Explain:* When the missile is launched there is a certain amount of back-blast. There is a hazard from the rearward ejection of the ammunition tube *(see* Fig 3). A zone 5.5 metres behind the firing post in an arc extending 533 mils each side of the axis must be clear of men, equipment and obstacles. The axis up to 5.5 metres behind the launcher must also be clear to a height of 0.5 metres above the axis of the ammunition tube.

0117. ***Decoying.*** *Explain:* The missile can be decoyed in flight if there is a strong infra-red source, such as a burning tank or building, in the sensing fields of the infra-red goniometer which results in incorrect commands being sent to the missile. Procedures to combat this limitation are given in Lesson 7.

Conclusion

0118. ***End of Lesson Drill.***

a. *Confirm the complete lesson.*

b. *Sum up the main points, emphasizing how the limitations can be minimized.*

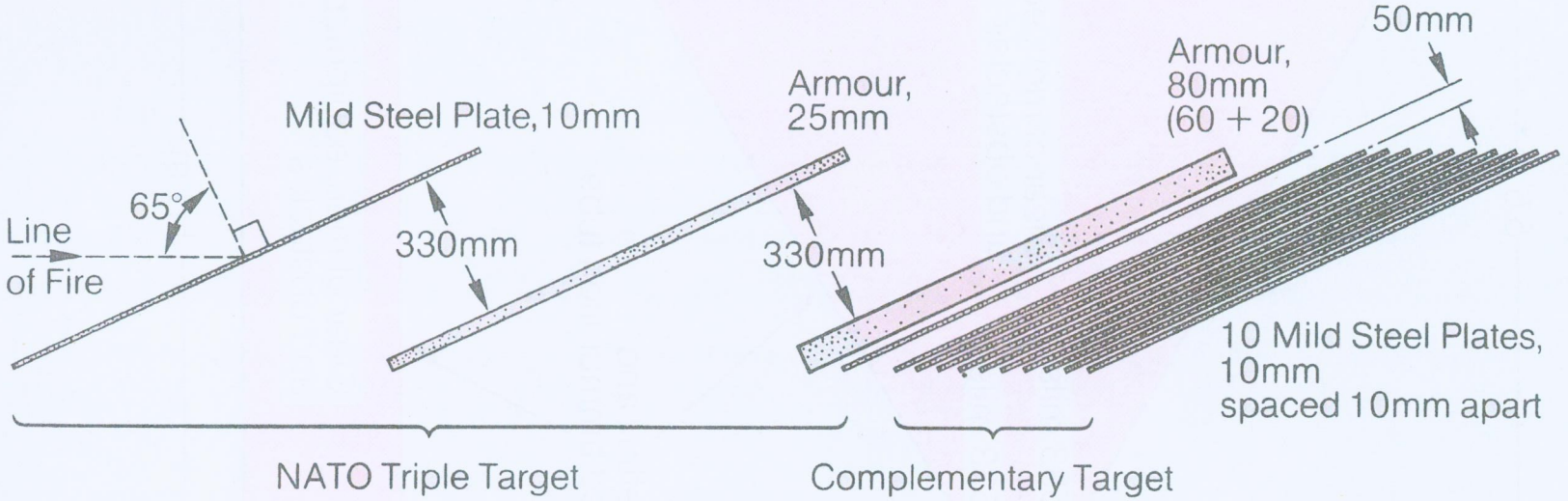

Fig 2. — Effect on Armour, NATO Triple Target

RESTRICTED

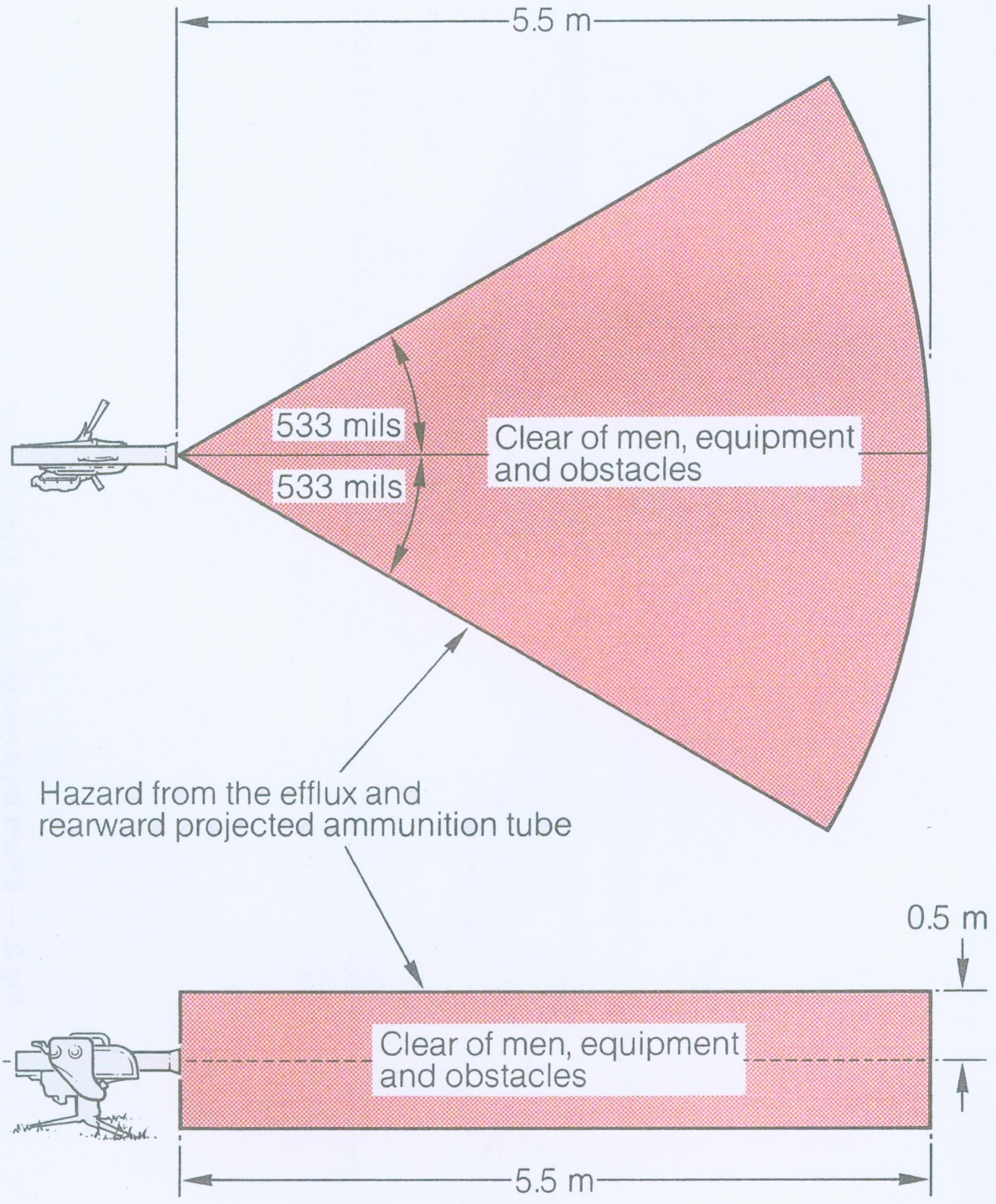

Fig 3. — Rear Blast Area

LESSON 2. — MIRA PRINCIPLE OF OPERATION AND CHARACTERISTICS

A. INSTRUCTOR'S NOTES

0119. ***Aim.***

a. *To provide a brief introduction to thermal imaging.*

b. *To explain how the system operates.*

c. *To illustrate the characteristics of MIRA.*

0120. ***Timings.*** *One 60 minute period — including video.*

One 40 minute period — without video.

0121. ***Method.*** *Lecture. An officer or SNCO instructor with preferably not more than 50 in the class.*

0122. ***Stores.***

Drops
Vufoils/slides — to illustrate the lecture
Overhead/slide projector
Film/video — An introduction to Thermal Imagery (Catalogue No. C 1586).

0123. ***Preparation.*** *All visual aids prepared and in order of presentation. The projectors are to be set up and tested.*

0124. ***Miscellaneous.*** *The film/video tape provides a general introduction to thermal imaging. Use the film to introduce the subject before dealing with specific details of its application to MIRA.*

B. CONDUCT OF THE LESSON

Introduction

0125. *Explain:* Originally MILAN's night fighting capability was limited to engagement only by accurately positioned white light. By day in conditions of bad visibility, e.g., battlefield smoke, obscuration, MILAN was blind. The introduction of MIRA has overcome both of these limitations and now permits MILAN to be an effective 24 hour weapon system. MIRA is a thermal imaging device. This means that the picture produced is obtained from heat or invisible energy emissions from objects in the field of view and as such is different from, and can bear little resemblance to, a normal visual picture as seen by the naked eye or through the MILAN day sight. It is

this different dimension of viewing that permits an effective 24 hour combat capability of MILAN. To gain maximum benefit from MIRA it is necessary to have a basic under-standing of how it works and a thorough understanding of its capabilities and limitations.

Electro Magnetic Energy

0126. *Explain:* When an object is heated by the sun or, as in the case of a vehicle,generates its own heat, energy is emitted or radiated. This energy is known as Electro Magnetic Energy (EME). It cannot be seen with the naked eye or through optically aided vision because it is similar to a radio signal. The hotter an object, or part of an object, the more EME is given off; this energy is called Electro Magnetic Radiation(EMR). MIRA (and other thermal imagers) detects EMR in the 8–13 micron band and converts it into a visible picture. The more EMR detected (i.e., from the hotter parts of the field of view) the brighter the picture becomes.

0127. *Confirm by questions.*

Atmospheric Conditions

0128. *Explain:* Certain atmospheric conditions can affect MIRA's performance, it is important that MILAN personnel fully understand the effects of these conditions on MIRA as this either increases or decreases the formations anti-armour capabilities.

Effects of Rain, Mist and Smoke on EMR

0129. ***Rain.*** *Explain:* The effects of rain on EMR can be considerable. Heavy rain forms a reflective barrier between the target and the MIRA through which the EMR must pass. This barrier scatters the energy and therefore reduces the amount getting through to MIRA. The effect is increased in proportion to the range *(see* Fig 4). Light rain will also have this effect proportional to range although not as severe. Rain also has a cooling effect on the target thus reducing the amount of energy emitted. This effect can continue even after the rain has ceased and until the moisture on the target surface has dried or evaporated, emitted energy may still be scattered by the moisture layer on the target.

0130. ***Mist and Fog.*** *Explain:* Mist and fog have a similar effect to rain on EMR.This is due to the density of water droplets in them. A hot target though, particularly at shorter ranges, should still be visible although its surroundings are unlikely to be.

0131. ***Smoke.*** *Explain:* Man-made smoke, e.g., mortar rounds and smoke generators, has no effect on MIRA at all. This is due to the fact that smoke particles are many times smaller than eight microns. Large particle smoke, e.g., grass fires,

is different. Whenever a grass fire is burning large particles of heated material are present in the air themselves emitting EMR. This has the effect of blotting out energy coming from behind them as well as scattering the energy in the same way as rain does.

0132. ***Snow and Sandstorms.*** *Explain:* Both snow and sandstorms have the same effect on MIRA as does rain because of the size and density of particles in the air. The effects are again increased in proportion to range.

0133. *Confirm by questions.*

Day and Night Effect

0134. ***Day.*** *Explain:* During daytime both targets and background are heated by the sun and with clear skies a good picture can be obtained. When the sky is overcast only limited heating of the ground occurs and vehicle targets will stand out well because they are much hotter than their surroundings due to the internal heating.

0135. ***Night.*** *Explain:* At night and providing it is not raining the ground features and foliage are still visible for some hours because they take a long time to cool down from the previous day's heating by the sun. Vehicle targets will stand out very well because of their high temperatures in comparison with their surroundings. Should a vehicle stop for any length of time it will lose its heat to the much cooler surroundings.This will make it difficult to detect due to the lack of contrast between the vehicle and its surroundings. However, to reach this state can take several hours.

0136. *Confirm by questions.*

System Layout and Operation

0137. ***Main Components*** *(see* Fig 5). *Explain:* To convert incoming EMR into a visible picture the following main components are used:

a. Gathering lens.

b. Scanner.

c. Detectors.

d. Signal processor.

e. Display unit.

0138. ***The Gathering Lens.*** *Explain:* Incoming EMR is gathered by the lens

and then reflected via a supplementary lens system on to the scanner. The gathering lens is made from a substance called Germanium which will permit EMR to pass through it.Glass will not permit EMR to pass through it.

0139. ***The Scanner.*** *Explain:* The scanner consists of a rotating drum. The circumference of the drum is made up of 12 mirrored facets, each facet being set at a slightly different angle of incidence to the incoming reflected EMR from the field of view. When the scanner rotates each facet scans one horizontal band of the field of view starting from the top. By the time one rotation is complete the whole field of view has been scanned once. The scanner rotates at 7000 revolutions per minute. The information from each facet is reflected on to the Detector Array *(see* Fig 6).

0140. ***The Detector Array.*** *Explain:* The detectors are arranged so that they cover the depth of each horizontal band produced by the scanner facets, thus the field of view is sensed from top to bottom as well as from left to right. Each detector is made of a substance which is highly sensitive to differences in EMR; to maintain sensitivity the detectors have to be cooled to approximately –196°C. Compressed pure air at 6,000 pounds per square inch is used for this task. The detectors produce an electrical signal for each detection of EMR. The stronger the EMR, e.g., from a hot source, then the greater the signal strength allocated. The result of this is a series of electrical signals corresponding in strength to the difference in temperatures within the field of view. This information is passed to the signal processor.

0141. ***The Signal Processor.*** *Explain:* The signal processor correlates the incoming electrical signals from the detectors and because it is linked directly to the display unit at the same time produces a visible picture. At this stage the incoming invisible EMR has been converted into a series of electrical pulses which are used to make a visible picture.

0142. ***The Display Unit.*** *Explain:* The display unit resembles a television in function. It is directly linked to the signal processor and consists of a number of red light emitting diodes (LEDs). The LEDs receive the electrical pulses from the signal processor and light up. The more power they receive then the brighter they become, hence a complete picture of the field of view is presented to the operator on a television type screen. The picture can be adjusted for brightness and contrast in the same way as a television picture, it can also be focused

0143. *Confirm by questions.*

0144. ***Application*** *(see* Fig 7). *Explain:* The infra-red picture produced by MIRA is positioned directly in front of the objective lens on the MILAN tracker. It is seen by the operator observing through the eye-piece lens as normal. Due to the layout of the optics/mirrors and the system of operation of MIRA the converted infra-red image is reflected back through MIRA from the display unit on an optical path parallel to the incoming EMR path. This relationship of parallel is termed harmonization. Harmonization is important and must be checked on certain occasions, it cannot be adjusted by the operator. In addition to the infra-red image, visible light can

pass through MIRA by means of a second lens system. This enables the operator to see a normal visible image of the field of view as seen through the MILAN day sight simply by raising a filter.

0145. ***Characteristics.*** *Explain:* Considering the operating principles of a thermal imager the characteristics of MIRA can be considered as either advantages or disadvantages.

Advantages

0146. ***Passive.*** *Explain:* MIRA is a completely passive device; it does not transmit any form of detectable energy unlike search lights, infra-red lights, radar or radios. It is therefore extremely difficult to detect.

0147. ***Range.*** *Explain:* Due to the system of operation of MIRA, detection recognition and identification of targets is possible at ranges far in excess of optically aided vision or the MILAN day sight. Weather conditions, and of course the skill of the operator, do affect ranges and therefore no precise distances can be quoted. However, the following information, relating to a trained and practised operator, is a good guide:

Serial	Action	Good Thermal Conditions	Bad Thermal Conditions
(a)	*(b)*	*(c)*	*(d)*
1	AFV Detection	3000 metres + Guaranteed at 2000 metres	Very Good chance at 2000 metres
2	AFV Recognition	Excellent chance at 1500 metres	Good chance at 1500 metres
3	AFV Identification	Very good chance at 1200 metres	Fair chance at 1200 metres

0148. ***Penetration.*** *Explain:* MIRA will detect targets behind light cover, e.g., camouflage netting, light foliage, or targets in thin woods. This is because it detects the radiated energy from such objects through the gaps in the camouflage. In the case of a vehicle, it would contrast vividly with its surroundings. Such targets would be extremely difficult, if not impossible, to see with the naked eye or the MILAN day sight at the longer ranges.

0149. ***Day/Night Capability.*** *Explain:* Because MIRA does not require visible

light it is completely unaffected by darkness. In some cases a better picture is obtainable by night than by day.

0150. ***Battlefield Smoke.*** *Explain:* MIRA is unaffected by battlefield smoke and will produce an image of targets either in or beyond the smoke.

0151. ***Portability.*** *Explain:* MIRA is compact and easily transported either in its tactical container or as an operator slung load in its carrying bag. With bottle and battery fitted it weighs approximately nine kilogrammes.

0152. ***Flexibility.*** *Explain:* Because MIRA fits to the MILAN firing post it naturally assumes the characteristics of flexibility that already apply to the MILAN. In addition to its normal role, it also provides an excellent addition to the surveillance and target acquisition plan for all types of operations and phases of war.

0153. *Confirm by questions.*

Limitations

0154. ***Logistics.*** *Explain:* MIRA requires to be cooled internally. High pressure pure air contained in bottles is required for this task. One bottle lasts for approximately two hours (continuous use). This means that an average of five bottles is required per battlefield day per MIRA. Bottles are charged by the charging equipment pure air which is held at battle group level hence an efficient resupply system is necessary to ensure that the platoons requirement of bottles is met. Power supplies in the form of lithium batteries are also required. Sufficient quantities of these should be carried in A echelon and within the platoon.

0155. ***Cleanliness.*** *Explain:* It is important that the air bottles and mechanism that connects the bottles to MIRA are kept clean. Failure to do this will result in dirt particles getting into MIRA. If the interior becomes contaminated severe degradation of the picture will occur resulting in MIRA becoming non-operational and possibly damaged internally.

0156. ***Not All Weather.*** *Explain:* The effects of rain and fog on MIRA have already been explained. Attenuation of the picture is relative to range and density of the rain/fog. Because it is possible for a target not to be detected in heavy rain or dense fog MIRA is therefore not an all weather system.

0157. *Confirm by questions.*

Conclusion

0158. ***End of Lesson Drill.***

a. *Confirm the complete lesson.*

b. *Pack kit.*

c. *Summarize the main points.*

d. *Stress the following points:*

(1) *The effect of atmospheric conditions on MIRA.*

(2) *The effect of natural smoke (i.e., grass/fire).*

(3) *The importance of a thorough knowledge of the advantages and limitations of MIRA.*

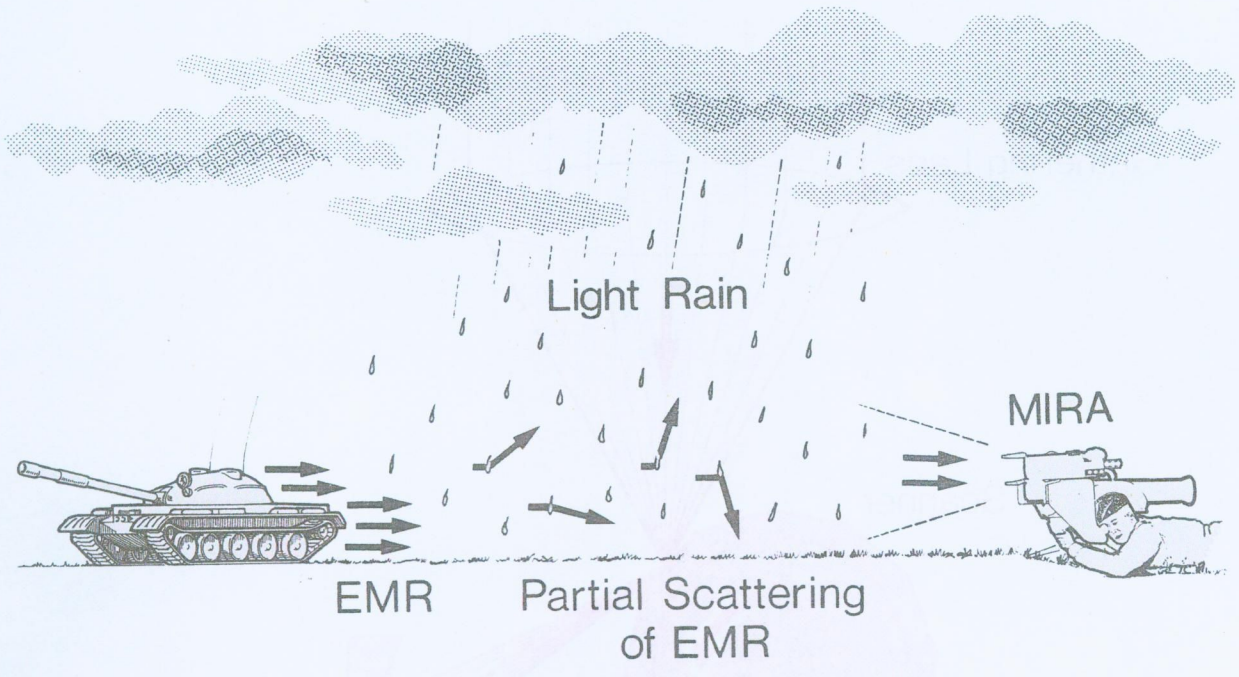

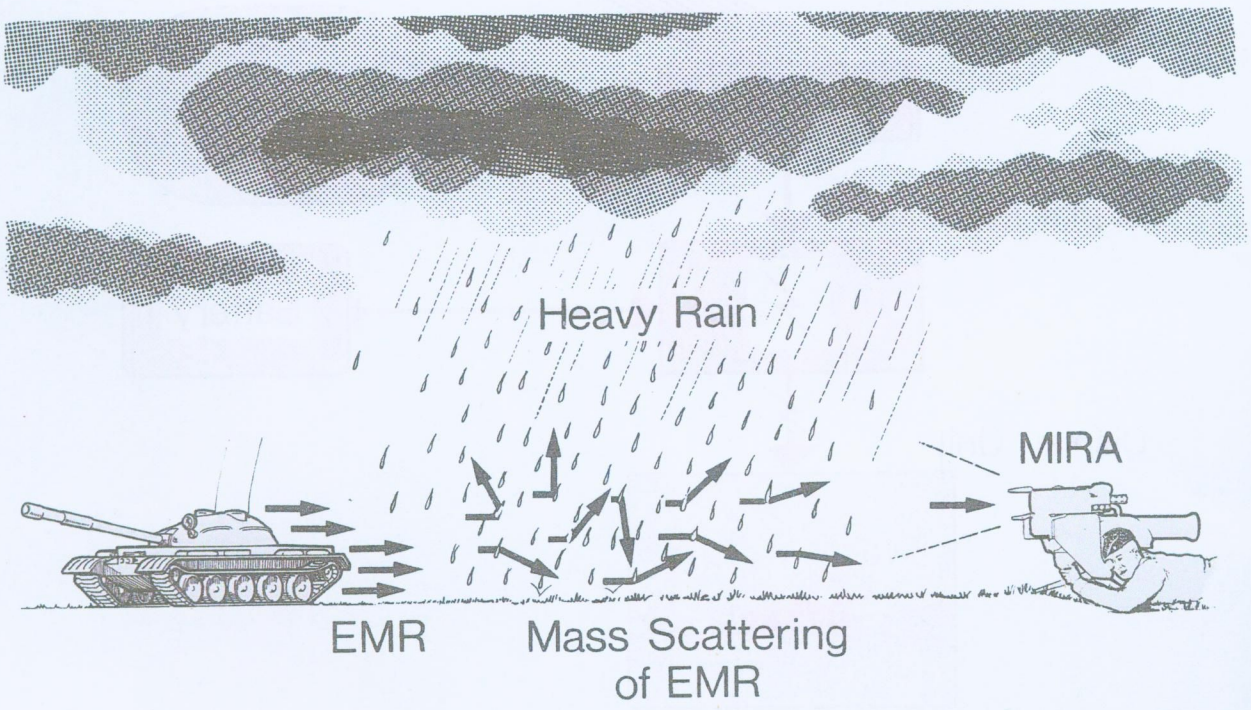

Fig 4. — Effect of Rain on EMR

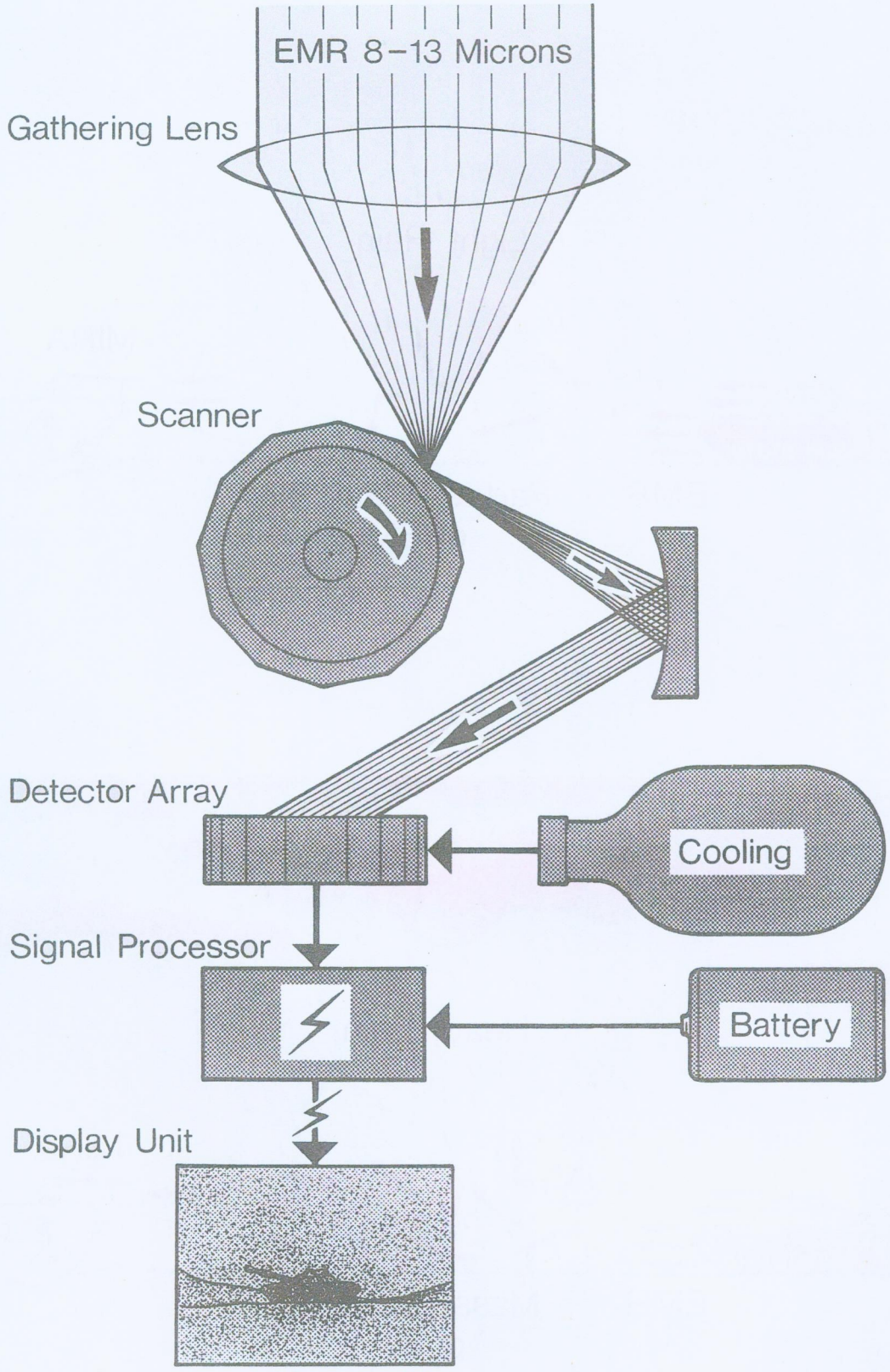

Fig 5. — MIRA System Layout

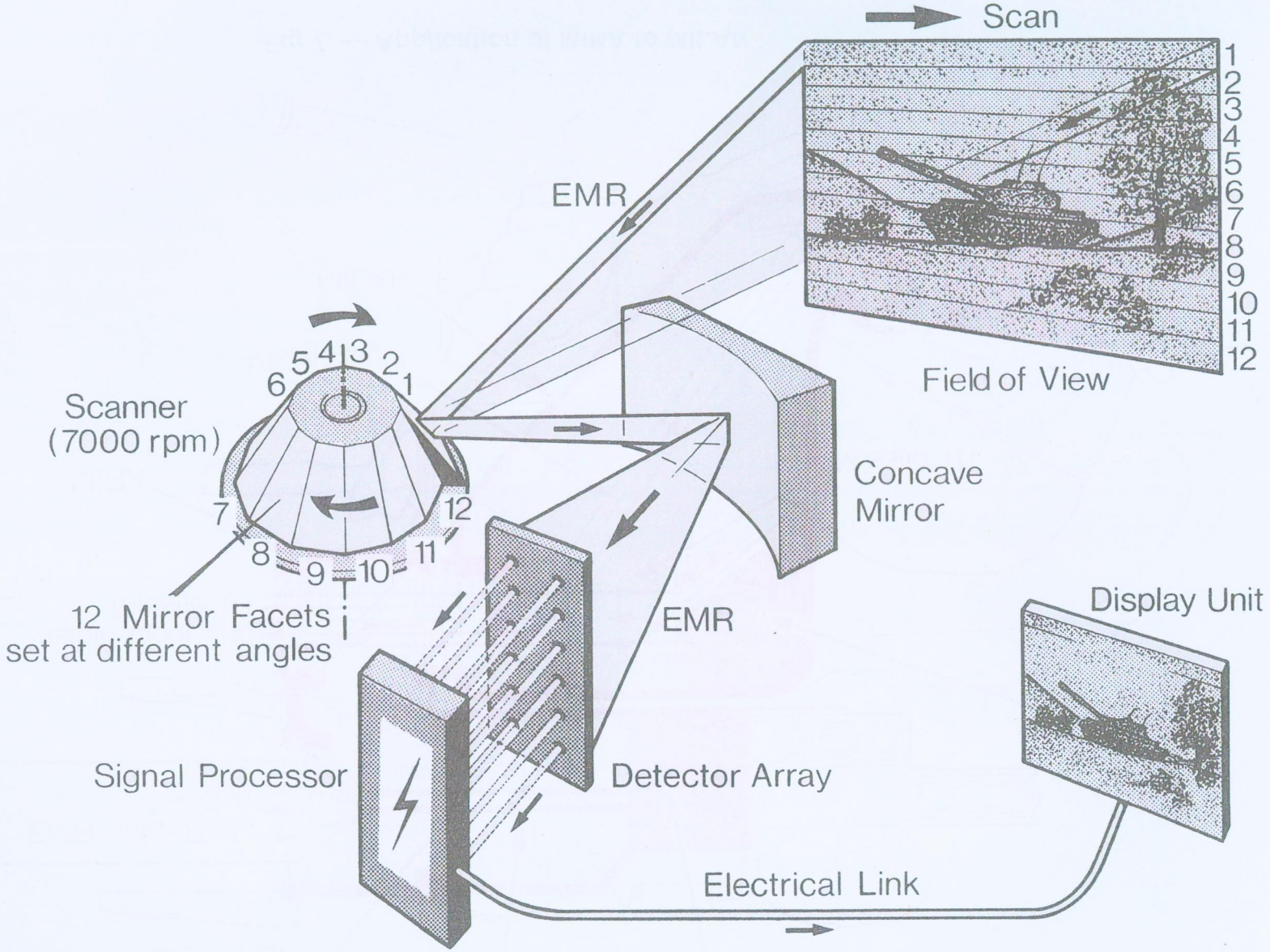

Fig 6. — Scanner and Detector Array

RESTRICTED

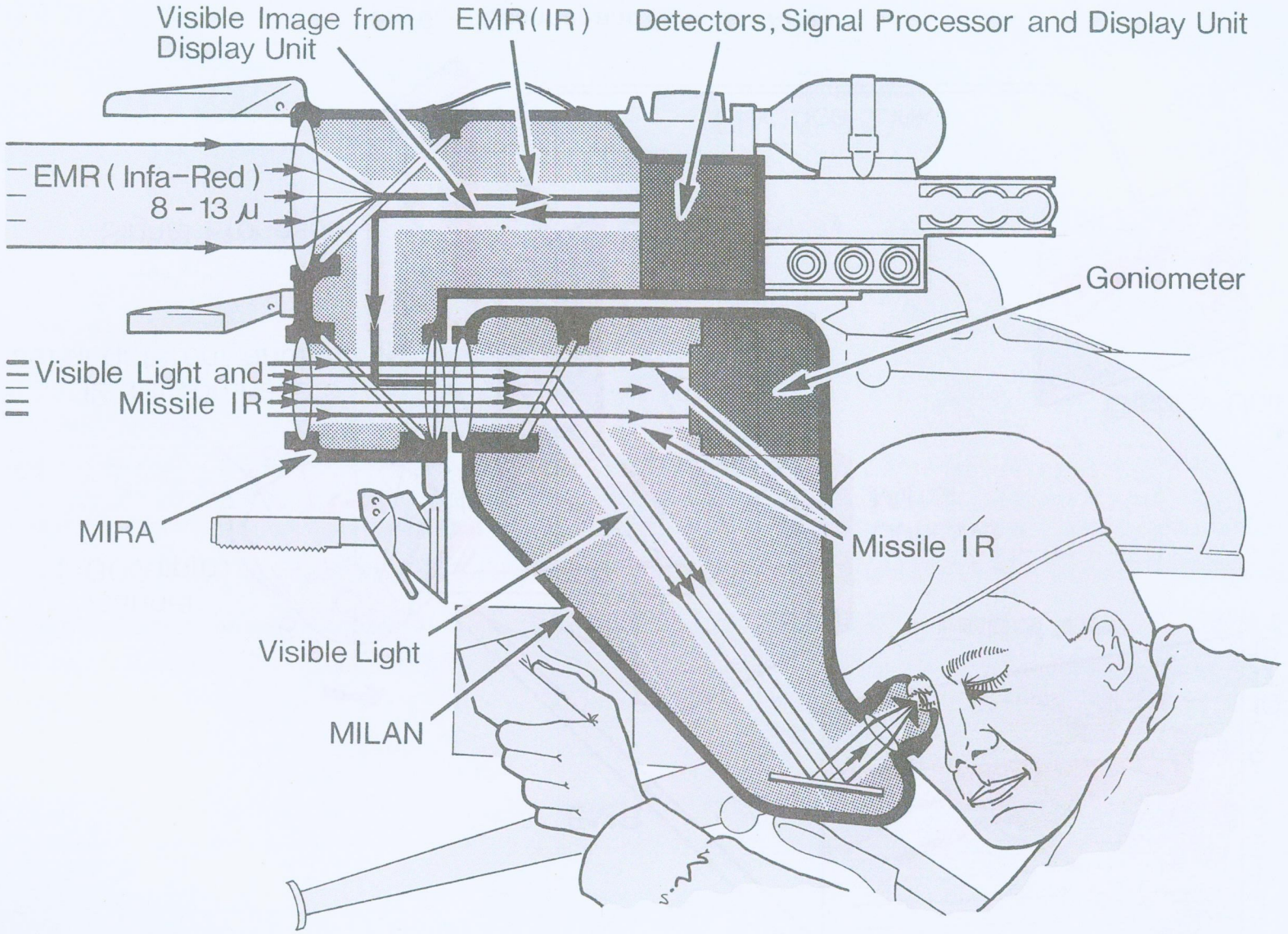

Fig 7. — Application of MIRA to MILAN

RESTRICTED

LESSON 3. — THE FIRING POST AND LOGISTIC CONTAINER

A. INSTRUCTOR'S NOTES

0159. ***Aim.*** *To teach a detailed description of the firing post and its logistic container.*

0160. ***Timings.*** *Two 40 minute periods.*

0161. ***Method.*** *A basic instructional indoor lesson.*

0162. ***Stores.***

Firing post and logistic container complete to CES
Screwdriver

0163. ***Preparation.*** *Firing post packed in its logistic container. Seating arranged in a semi-circle in front of the logistic container.*

0164. ***Miscellaneous.*** *When answering questions the squad instructor should be careful not to get involved in the subject matter of other lessons. The squad should not be expected to remember all the part names at this stage but should be reminded of them as they arise in subsequent lessons.*

B. CONDUCT OF THE LESSON

Preliminaries

0165. ***Safety Precautions.*** *Explain that no safety precautions are necessary on the firing post.*

Introduction

0166. *Explain:* A thorough knowledge of the firing post is essential to enable correct handling, servicing and testing of the weapon system to be carried out by all members of the MILAN platoon.

The Logistic Container

0167. ***Description.*** *Explain and demonstrate:* The logistic container houses the firing post and protects it during transportation and storage. It is made of reinforced plastic and when packed weighs 60 kilogrammes for a British manufactured container or 65 kilogrammes for a French/German manufactured container. Stencilled in white on both sides and on the lid, is the following information: the word MILAN, the NATO stock number, the manufacturer's code number and the manu-

facturer's drawing number. Stencilled on one side only are the weight, volume, temperature limitations, the firing post number and the container serial number *(see* Fig 8). Four carrying handles are fitted, two on the lid and two on the lower half. The lid is secured by ten clamps. On one side are the humidity indicator and pressure release valve. The humidity indicator will turn pink if subjected to an unacceptable level of moisture within the container. A blue or white humidity indicator is acceptable. The pressure release valve may need to be operated before the container is opened. This enables pressure to be equalized and the lid removed. On the top and bottom of the container are corresponding male and female mouldings to assist in stacking.

0168. *Confirm by questions.*

0169. ***Unpacking the Firing Post.*** *Explain and demonstrate:* If necessary operate the pressure release valve and unfastened the clamps, the lid may be removed. Inside the lid and secured by two straps is the Complete Equipment Schedule. Inside the container are three moulded horsehair pads, designed to protect the firing post by acting as shock absorbers. Care in handling the pads is essential to avoid damage. On the top of the top pad are two compartments, one which originally housed the User Handbook and another which contains the accessory pack with cleaning materials and batteries *(see* Fig 9). Remove the top pad to expose the firing post. The firing post is positioned in a compartment in the centre pad *(see* Fig 10). To remove it, grip the firing post by the firing handgrip and the carrying handle and lift it out. The firing post is not to be laid down on its tracker. The second pad may now be removed and the tripod lifted out (see Fig 11). The container is issued complete with six desiccant bags designed to absorb moisture, these are stowed as follows: two on the top pad and two in each corner recess. The bottom pad is removable but it is not normally necessary to do so. Each pad has a yellow mark at one end corresponding to a yellow mark on the interior of the container. These ensure correct packing.

0170. ***Packing.*** *Explain and demonstrate:* Place the tripod in position over the bottom pad, ensuring that the legs are fully folded and the elevation handgrip is located in its recess. Reposition the centre pad and replace the four desiccant bags in their recesses. Grasp the firing post by the carrying handle and firing handgrip and replace it in its compartment. Reposition the top pad, it will not lie flush on the centre pad. Replace the two remaining desiccant bags. Replace the lid ensuring that it seats correctly then secure the clamps.

0171. *Confirm by practice. Leave the firing post unpacked at the end of practice.*

Assembling and Dismantling the Firing Post

0172. ***The Tripod.*** *Explain and demonstrate:* The function of the tripod is to provide a stable firing platform from which the firer can track and engage a target. It is made of lightweight steel. The tripod consists of a turntable mounted on a plat-

form to which are attached the three legs *(see* Fig 12). The legs are held in position by clutch plates and secured by spring loaded clamp levers which are protected by a REME modification consisting of a rubber sleeve. The legs are folded together, beneath the platform, for transportation and storage. The front leg, marked with a white line, is pointed towards the centre of the arc of fire when the tripod is set up in the fire position, it also acts as a reference when folding the other two legs. The turntable has a free traverse of 6400 mils and attached to the turntable is the elevation handgrip.Elevation is achieved by twisting the handgrip, this action operates two plungers which bear against the rollers on the underside of the guidance electronics pack. The elevation range is ±180 mils. The mid elevation point is indicated when the white elevation indicator corresponds with the moulded indicator on the turntable. The two knife edges on either side of the mounting rod, on top of the turntable, are used for securing the firing post to the tripod. Positioned beneath the platform are three grease nipples fitted with red plastic dust covers. By manipulating the tripod legs, the tripod can be adjusted to provide a level platform on uneven ground and the height of the ammunition tube above ground varied between 300 and 500 millimetres.

0173. *Confirm by questions.*

0174. ***Locking Devices.*** *Explain and demonstrate:* The locking of the remainder of the firing post onto the tripod is achieved by means of two mounting hooks on the bottom of the guidance electronics pack which engage under the two knife edges on the tripod turntable *(see* Fig 13). Two rollers are fitted to the bottom of the guidance electronics pack which bear on the two plungers when the elevation handgrip is operated.

0175. ***Fitting.*** *Explain and demonstrate:* Fully extend the tripod legs and position the elevation handgrip over the right tripod leg. Check that the elevation handgrip is turned fully clockwise and that the plungers are correctly seated in their housing. With one hand on the carrying handle and the other holding the rear of the support assembly, position the firing post above the tripod. Locate the two hooks under the knife edges, maintaining a grip on the carrying handle.Turn the elevation handgrip anti-clockwise. After approximately three turns a resistance will be felt. Continued turning of the handgrip could be followed by an audible click. The firing post is now secure. Further turning of the elevation handgrip will raise the support assembly, and the elevation indicator can be centralized.

0176. *Confirm by questions.*

0177. ***Removing.*** *Explain and demonstrate:* Maintaining a grip on the carrying handle, turn the elevation handgrip clock-wise until a resistance is felt. Continue to turn until no resistance is felt. An audible click may also be heard. After approximately three turns a stop will be felt. No attempts should be made to turn the elevation handgrip beyond this point. The firing post can now be lifted clear of the tripod by disengaging the two hooks on the guidance electronics pack from the two knife edges on the tripod turntable.

0178. *Confirm by practice.*

Components of the Firing Post

0179. *Explain:* The weight of the complete firing post is approximately 18 kilogrammes. It consists of four main components: the tracker, guidance electronics pack, support assembly and the tripod *(see* Fig 14). Only the tripod is removed by the user. Any other stripping must be done by REME.

0180. *Confirm by questions.*

0181. ***The Tracker.***

a. *Function. Explain:* The function of the tracker is to permit target acquisition, target tracking and missile guidance. It does this by locating the position of the missile in flight relative to the line of sight.

b. *Description. Explain:* The tracker is made of hardened plastic which is protected by a rubber cover. The rubber cover is held in place by 11 fasteners.The tracker is attached to and paralleled with the support assembly by means of three bolts. The lens is protected by a cover which incorporates a spring loaded flap and ray shield. The cover is easily removed and care must be taken to avoid loss. At the top of the tracker is a humidity indicator which will turn pink if the inside of the tracker is subjected to an unacceptable level of moisture. On the side of the tracker is an auxiliary sight which is no longer used. To enable the firer to observe the target, an eyepiece fitted with a protective rubber cover is linked internally by a series of prisms to the lens. The sight has a field of view of 150 mils, magnification of x7 and contains a reticle. The eyepiece can be focussed by means of a focussing ring which has graduations on the outside.The tracker is linked to the guidance electronics pack by means of an electrical connection.

0182. *Confirm by questions.*

0183. ***The Guidance Electronics Pack.***

a. *Function. Explain:* The function of the guidance electronics pack is to generate the missile command signals required to maintain the missile on its correct flight path. To perform this task it uses the information supplied by the tracker through the electrical connection. The bottom of the pack also provides a mounting surface for the tripod.

b. *Description. Explain and demonstrate:* Two connections are fitted to the left side, one for the test equipment or simulator and one for the tracker. The firing handgrip is also positioned on the left side. Built into the handgrip is the firing button which is coloured red, when pressed it operates a generator. A two position safety flap is pivoted above the firing button. When the flap is

covering the button, a mechanical safety element is in force which will prevent the ignition of the missile even if the firing button is pressed. When the flap is clear of the button, the mechanical safety element is removed and ignition of the missile will occur when the button is pressed. The firing handgrip is also used by the firer to traverse the firing post. A day/night switch is located on the right of the guidance electronics pack. This is used to select either the day and night tracer, or just the night tracer. With the white indicator mark at the 12 o'clock position, the day and night tracers are initiated. To select night tracer only, push in the day/night switch and turn clockwise to the night position. This will also illuminate the reticle. Continued turning of the switch will increase the brightness of the reticle. To re-select day and night tracer, the switch must be turned anti-clockwise; the switch will automatically reassert itself. For firing in adverse conditions, i.e., dusk, dawn, smoke, rain, etc., pull the switch out and turn clockwise. This will provide day and night tracer with reticle illumination. The black plastic cover seals the battery compartment which houses three rechargeable 1.2 volt nickel cadmium batteries that provide power for the reticle illumination. Leaking nickel cadmium batteries pose a toxic hazard and if handled, hands must be washed. If these batteries become unserviceable, and replacements are not available, then SP 11, 1.5 volt batteries may be used in lieu. To prevent damage to the equipment batteries are to be removed from the battery compartment when not in use. Mounted on top of the guidance electronics pack is the male connector which provides the link between the guidance electronics pack and the ammunition. The connector is also used for attaching the unit tester or the simulator. A humidity indicator mounted on the top will turn pink if the inside of the guidance electronics pack is subjected to an unacceptable amount of moisture. No attempt should be made to remove the humidity indicator or this will result in moisture from the air entering the guidance electronics pack.

0184. *Confirm by questions and practice.*

0185. ***The Support Assembly.***

a. *Function. Explain:* The function of the support assembly is to support and lock the ammunition tube when it is loaded onto the firing post. It also provides mounting surfaces for the carrying handle and sling swivels.

b. *Description. Explain:* The support assembly consists of two parallel lightweight metal tubes which are connected by spacers. A third tube provides a mounting surface for the shield and the carrying handle. A machined groove at the front of the assembly receives the forward part of the junction box on the ammunition tube. A guide is positioned between the parallel tubes to assist in the loading of the ammunition tube. The ammunition tube is locked in place at the rear by two ball lugs and a latch. An adjustable webbing strap is also provided and can be positioned on either of the front two swivels.

0186. *Confirm by questions.*

Conclusion

0187. ***End of Lesson Drill.***

a. *Confirm the complete lesson.*

b. *Pack kit.*

c. *Summarize the main points.*

d. *Stress the importance of a thorough knowledge of the basic components of the equipment, and their function before introduction to the drills and operating techniques.*

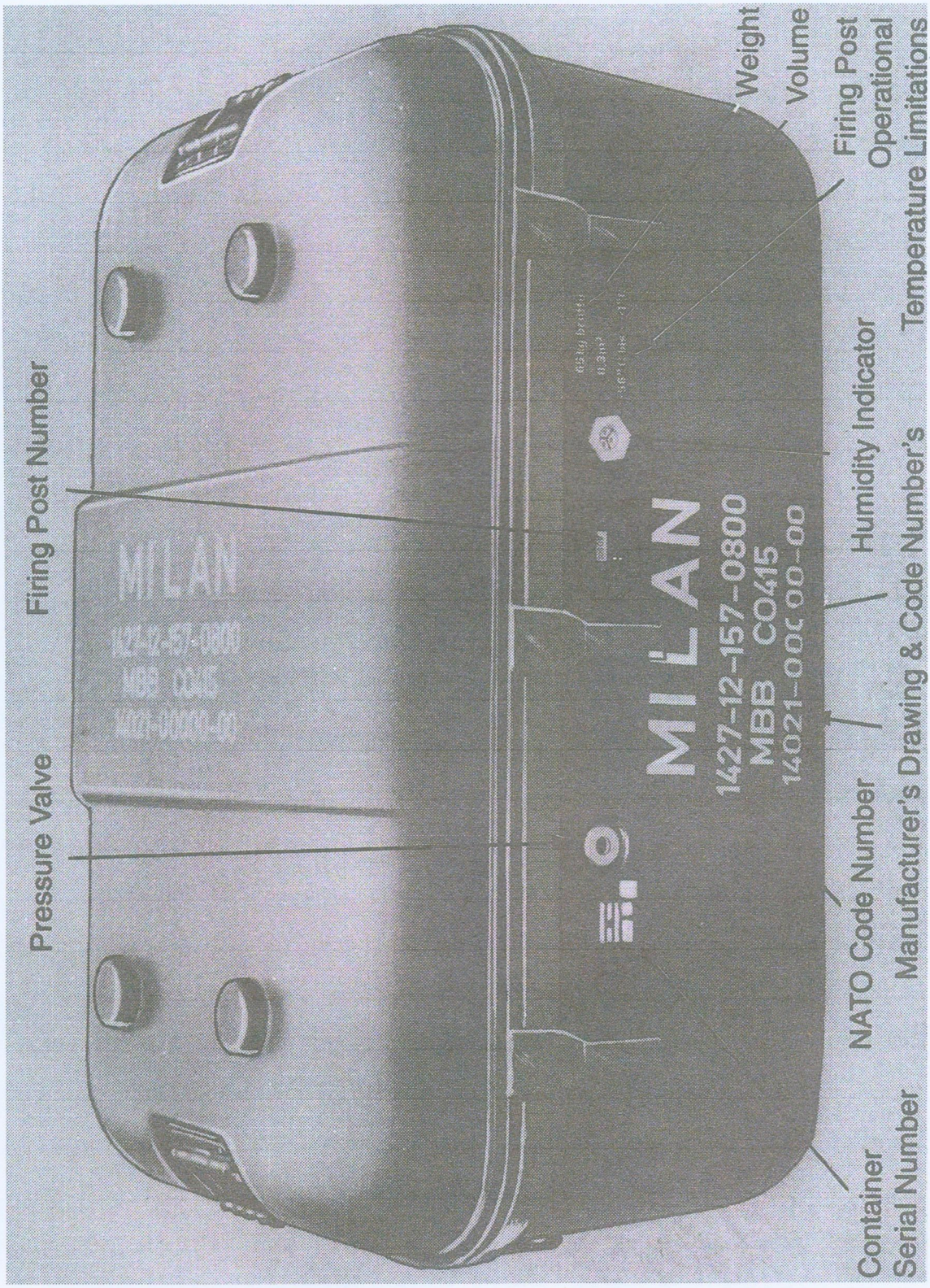

Fig 8. — Firing Post Logistic Container

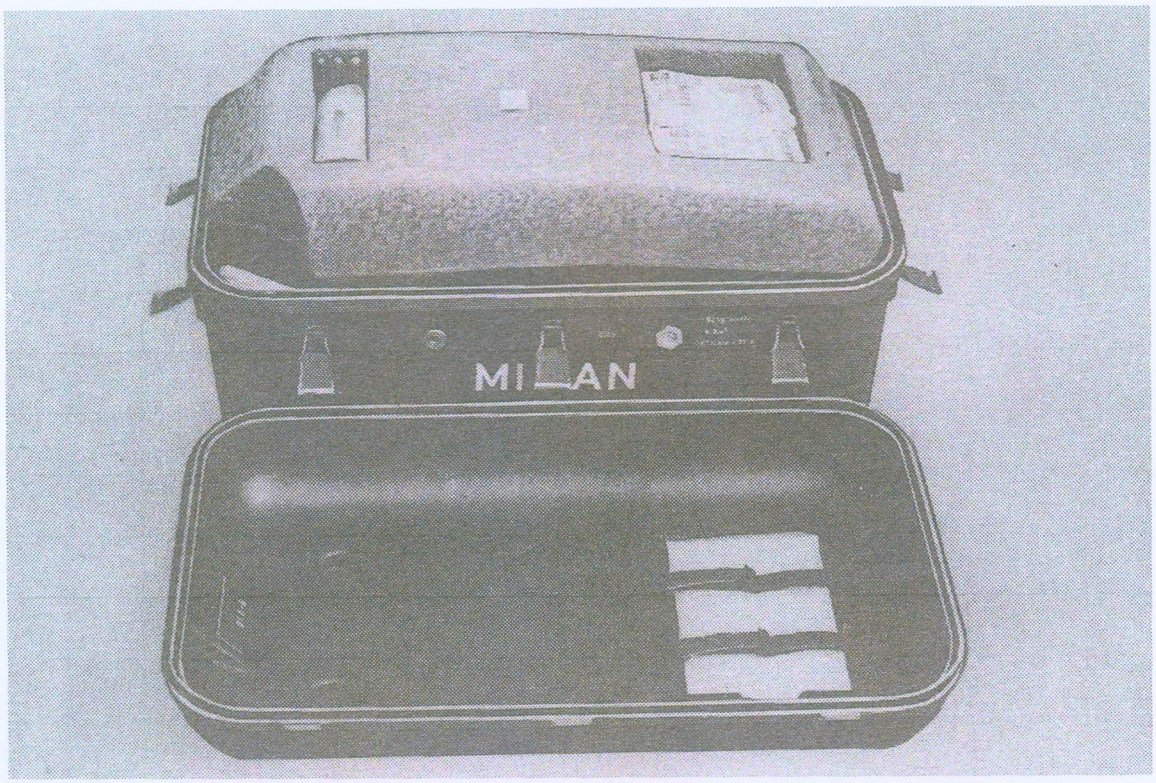

Fig 9. — Firing Post Logistic Container, Lid Removed

Fig 10. — Firing Post Logistic Container, Top Pad Removed

Fig 11. — Firing Post Logistic Container, Centre Pad Removed

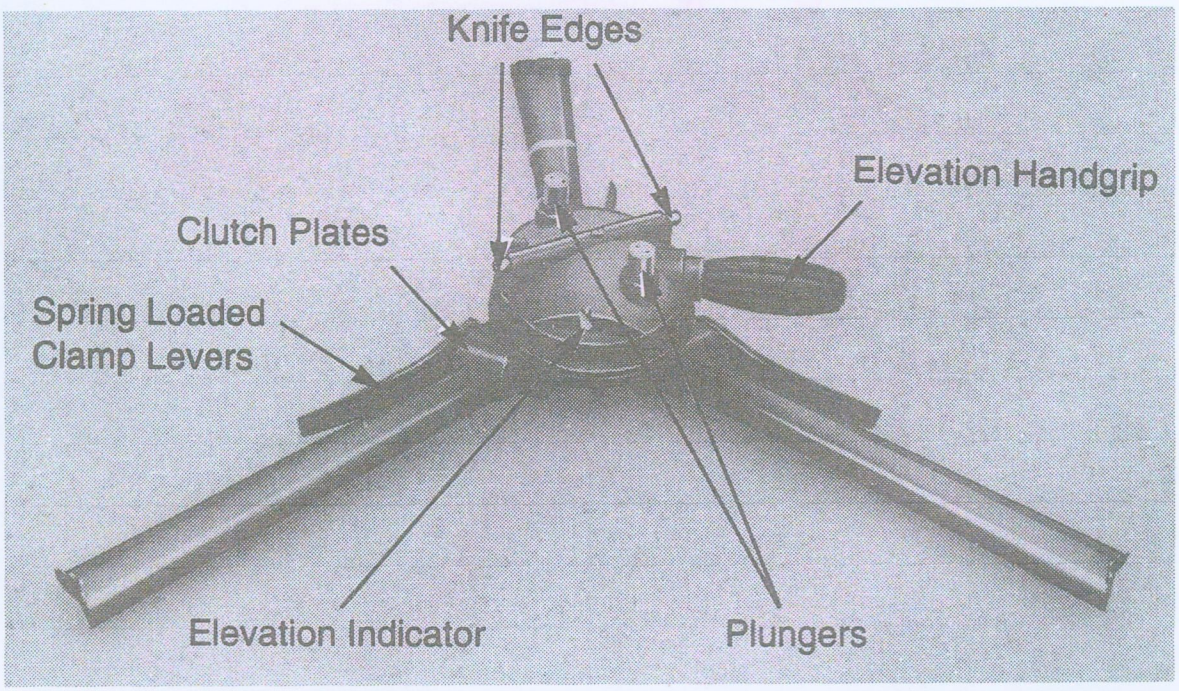

Fig 12. — Tripod

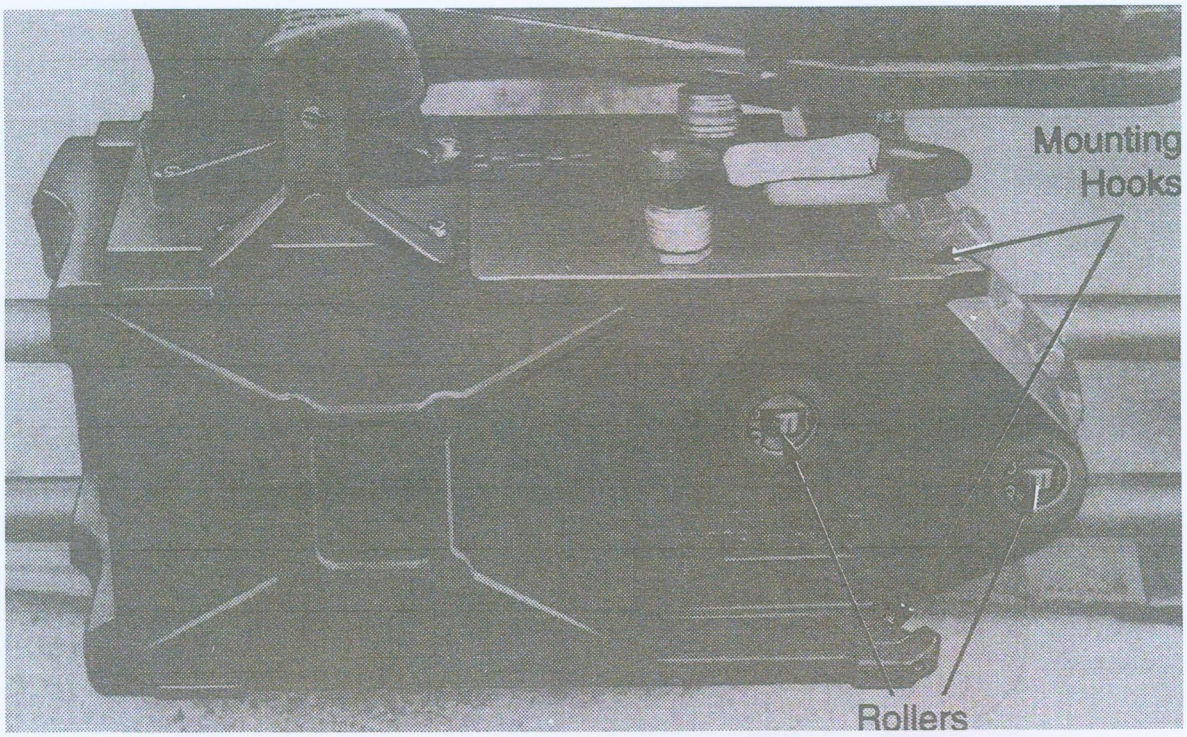

Fig 13. — Underside of the Guidance Electronics Pack

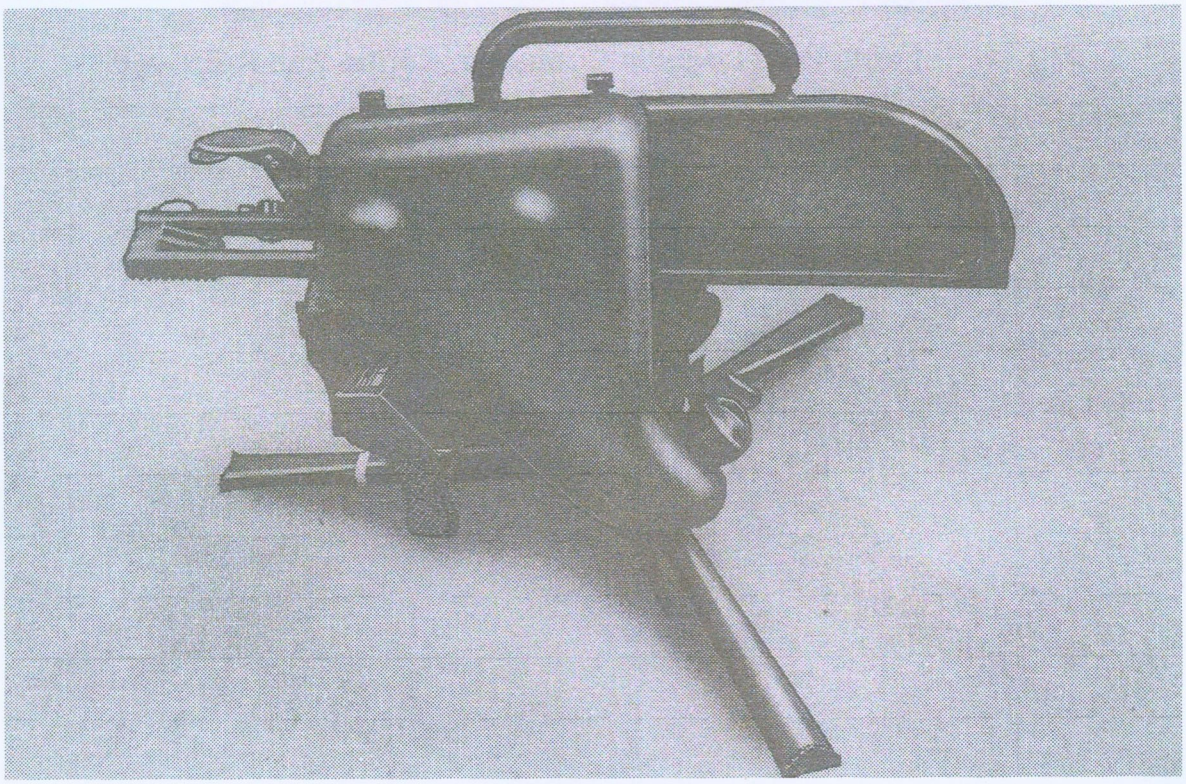

Fig 14. — Firing Post

LESSON 4. — MIRA AND TACTICAL CONTAINER

A. INSTRUCTOR'S NOTES

0188. ***Aim.***

a. *To teach a detailed description of MIRA with its associated equipments and tactical containers.*

b. *To teach safety procedures where applicable.*

0189. ***Timings.*** *Two 40 minute periods.*

0190. ***Method.*** *A basic instructional indoor lesson.*

0191. ***Stores.***

MIRA in tactical container
Mounting bracket
Air bottles in tactical containers
2 hour lithium batteries
4 hour lithium batteries
DC to DC converter
Carrying bag

0192. ***Preparation.*** *MIRA packed in tactical container with mounting bracket, one bottle and one battery. All remaining stores to hand but concealed from view. Seating arranged. Ensure safety precautions have been carried out on all relevant equipments.*

0193. ***Miscellaneous.*** *When answering questions the instructor must be careful not to get involved in the subject matter from other lessons; this will confuse the squad at this stage. The squad will not remember all the part names initially but should be encouraged to do so in subsequent lessons.*

B. CONDUCT OF THE LESSON

Preliminaries

0194. ***Safety Precautions.*** *Explain:* There are no safety precautions applicable to MIRA itself. Safety precautions do apply to the high pressure air bottles and lithium batteries and will be dealt with later.

Introduction

0195. *Explain:* A thorough knowledge of the equipment is essential in order to achieve correct handling and maintenance. It will also make clear the reasons for certain drills and procedures taught in later lessons. All members of the MILAN platoon must be proficient in all aspects of the MIRA in order to maintain maximum battle efficiency of the platoon.

Tactical Container

0196. ***Description*** *(see* Fig 15). *Explain and demonstrate:* The tactical container is used to store MIRA either in the vehicle fittings or when not deployed in barracks.The container is made of lightweight construction and weighs approximately 13.8kilogrammes when packed. A spring loaded carrying handle is provided and by means of operating the two quick release clamps the lid can be opened. Situated on the front of the container is a pressure release valve and a humidity indicator. On occasions it may be necessary to operate the pressure release valve in order to open the lid. Also situated on the front of the container is the manufacturer's label which contains the serial number of the MIRA inside. Male and female mouldings are provided on the lid and the underside of the container to assist in stacking. Stencilled in white on the lid are the equipment designation, manufacturers code number and NATO stock number. The inside of the container is filled with moulded rubber padding into which the MIRA fits. Lens cleaning material and a desiccant bag are housed in individual compartments within the container.

0197. *Confirm by questions. Remove the MIRA from the container.*

The MIRA *(see* Fig 16)

0198. ***Description.*** *Explain and demonstrate:* The MIRA now makes possible effective 24 hour use of the MILAN weapon system. It is easily attached to the firing post and automatically positions the field of view in front of the tracker lens. MIRA is compact and portable, it weighs approximately seven kilogrammes and with a bottle and battery fitted approximately nine kilogrammes. The field of view is 106 x 53 mils and it has a magnification of times one. The equipment can also be operated from external supplies of electricity. The equipment comprises eight principal components as follows:

a. Protective covers.

b. Gathering lens.

c. Daylight filter and visible light entry window.

d. Body.

e. Bottle housing.

f. Battery housing.

g. Master switch.

h. Control panel.

0199. *Confirm by questions.*

01100. ***Protective Covers.*** *Explain and demonstrate:* Two hinged protective covers are fitted to the front of MIRA. Both are made from a lightweight alloy and are reinforced externally to afford greater rigidity. A mechanism connecting the covers ensures that the lower cover must be in the open position before the upper protective cover can be opened. To open the lower cover push forward on the protruding flange, when the cover is fully raised it will automatically lock in position. The upper protective cover is opened in the same way. To close the covers it is necessary to shut down the upper cover first. This unlocks the mechanism that is now holding the lower cover in its raised position and will permit the closing down of the lower cover. Failure to open and close the protective covers in this sequence will damage the locking mechanism.

01101. *Confirm by questions and practice leaving the protective covers open.*

01102. ***Gathering Lens.*** *Explain:* The gathering lens is made from Germanium and will permit EMR to pass through it. The lens is seated in a rubber surround which helps prevent the entry of moisture and also acts as a shock absorber. The lens gathers and then focusses incoming EMR from the field of view into the interior of MIRA.

01103. ***Daylight Filter and Visible Light Entry Window.*** *Explain and demonstrate:* The daylight filter is hinged above the entry window. It filters out high levels of visible light and at the same time permits the infra-red radiations from the missile to pass through it and be detected by the goniometer within the tracker. The daylight filter is raised by pushing forward on its protruding flange. Whenever a thermal image is required the daylight filter must be in its lowered position covering the visible light entry window. With the daylight filter raised the operator sees a normal visual picture of the field of view. This would still be the case even if the MIRA was switched on because the visible light would override the infra-red image. In conditions of very low light, e.g., dusk or dawn, it is possible to obtain a thermal image superimposed on a visual light image by means of switching on MIRA and partially raising the daylight filter. The relevance of this facility will be taught in a later lesson.

01104. ***Exit Window.*** *Explain and demonstrate:* Positioned behind the visible light entry window is the exit window to the MILAN tracker. The exit window will permit either visible light or a thermal image to be seen by the operator. Mounted over the window are rubber bellows which will prohibit visible light entering the MILAN

tracker lens and thus overriding the thermal image when MIRA is mounted. The rubber bung in the bellows must always be removed before mounting MIRA on to the firing post.

01105. *Confirm by questions.*

01106. ***Body.*** *Explain and demonstrate:* Contained within the body are all the components necessary to produce a thermal image. Interior struts afford greater strength to the basic assembly. Two protective panels are fitted, one either side of the body. The panels are made from a light alloy and ridged to afford greater strength. The upper surface of the body mounts a recessed nylon carrying handle and the upper rear section mounts the master switch. The underside is shaped so as to provide a guide ridge which on mounting to the mounting bracket mates with a corresponding recess in the bracket thus achieving stability. Forward locking of MIRA to the mounting bracket is achieved by means of two guide ribs, one either side of the lower body casing engaging in two ball lugs on the mounting bracket. Rearward locking is achieved by means of a machined tunnel on the rear of the guide ridge enveloping a protruding spigot on the mounting bracket.

01107. *Confirm by questions.*

01108. ***Bottle Housing.*** *Explain and demonstrate:* The bottle housing is situated at the rear of the equipment. A plastic protective plug is fitted to prevent dirt or dust from entering the housing when a bottle is not attached. Contained within the housing are two locking bars into which the bottle neck fits on mounting. In the centre of the housing is a tubular probe which mates with the exit vent on the bottle thus allowing air to pass to the interior of MIRA when the master switch is turned on. The locking bars are linked to the master switch and open or close on demand from the switch.The entrance to the bottle housing is surrounded by a rubber moulding. On fitment of the bottle it conforms to the bottle neck thus reducing the chance of dirt or water collecting in the housing. The two horizontal sprung seatings fitted to the rear of the housing support the bottle when it is fitted; a rubber securing strap provides the final aid to bottle stability. On the left side of the bottle housing is a removable filter; the changing of filters is a REME task. Beneath the bottle housing is a pressure release valve. Any excess pressure within MIRA is vented out by this means when the master switch is turned on.

01109. *Confirm by questions.*

01110. ***Battery Housing.*** *Explain and demonstrate:* The battery housing is situated directly beneath the bottle housing. Two male terminals are mounted within the housing on the right side. On fitting the battery they engage the corresponding female terminals on the battery. The housing will accept either the 2 hour or 4 hour lithium disposable batteries, and is designed so that only correctly fitted batteries are accepted. A spring clip on the left side of the housing will engage in a recess in the battery on fitment thus locking the battery in position. The male terminals are linked electrically to the master switch. A running time indicator is situated at the

rear of the equipment and beneath the battery housing, the indicator is graduated up to 1000 hours. When the indicator shows 900 hours the MIRA requires internal cleaning and servicing, this is a REME task.

01111. *Confirm by questions.*

01112. ***Master Switch.*** *Explain and demonstrate:* The master switch is situated on top of the equipment and behind the carrying handle. It is linked to the air and power supplies. A white reference mark is painted on the left side of the switch. The top of the switch displays three indication signs as follows:

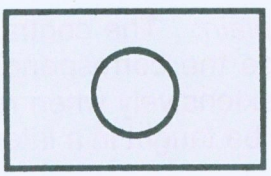

Air and power 'Off'.

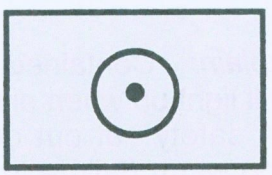

Air and power 'On'.

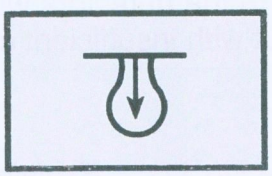

Bottle release.

01113. ***Use of the Switch.*** *Explain and demonstrate:* To switch on the equipment turn the master switch one quarter of a turn clockwise. Switching off is the reverse procedure. To release the bottle from the 'Off' position turn the master switch anti-clockwise until a stop is met (approximately one eighth of a turn). This action withdraws the locking bars from the bottle neck and will permit withdrawal of the bottle from the housing. On releasing the master switch from the bottle release position it will reassert itself under influence of an inbuilt spring mechanism and come to rest in the 'Off' position.

01114. *Confirm by questions.*

01115. ***Control Panel.*** *Explain and demonstrate:* The control panel is situated on the rear left side of the equipment and consists of three recessed knurled controls.The controls are used by the operator to adjust the infra-red picture as follows:

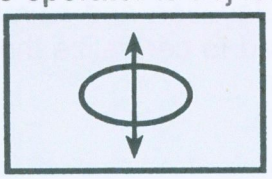

Focus.

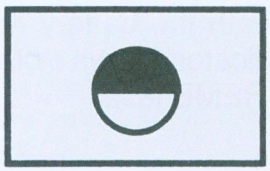

Contrast.

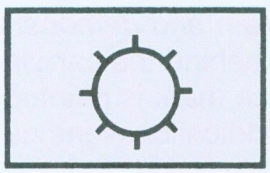

Brightness.

01116. ***Use of Controls.*** *Explain:* The contrast and brightness controls operate in much the same way as do the corresponding controls on a television set. Both of these controls are used extensively when recognizing and identifying potential targets.Their detailed use will be taught in a later lesson.

01117. *Confirm by questions.*

01118. ***Interior Devices.*** *Explain:* Contained on the inside of the equipment are two warning indicators that will light up when either air pressure or battery power falls below the required level. A safety cut out device will shut off the electrical power if the detectors become too warm (failure to rectify low air pressure). This is an important feature as damage to the detectors would result if the equipment were allowed to remain switched on but with insufficient cooling capability.

01119. *Confirm by questions.*

01120. ***Mounting Bracket*** *(see* Fig 17). *Explain and demonstrate:* The mounting bracket fits to the firing post and ensures that the MIRA's visible light entry/exit window is positioned directly in front of the firing post lens. The bracket is made of lightweight steel and is tubular in construction. On the bottom of each leg is a hardened plastic stud for seating the bracket on the firing post. Locking of the bracket to the firing post is achieved by a securing device which consists of a spring loaded hook and a tightening knob which is situated on the upper part of the bracket. On the forward end of the bracket is a circular housing for the attachment of the firing post lens cover when the MIRA is fitted. On the upper front of the bracket are two ball lugs which engage in the guide ribs on either side of the MIRA body. These provide forward locking of the MIRA to the bracket. At the upper rear of the bracket there is a securing device which consists of a spigot, hook and locking mechanism, these along with the machined tunnel on the MIRA provide rear locking of the MIRA to the bracket. On the top of the bracket there is a tray into which fits the guide ridge of the MIRA. This acts as a guide when the MIRA is being fitted and also gives added support once it is fitted. Elevation and azimuth adjusters are situated at the rear of the bracket, these are used to centralize the thermal picture over the field of view.

01121. *Confirm by questions.*

01122. ***Air Bottles*** *(see* Fig 18). *Explain:* The air bottle is made of steel, weighs approximately one kilogramme and has a capacity of 0.33 litres. It contains high pressure 'pure air' that is required to cool the detectors within MIRA. A fully charged bottle will last for approximately two hours' continuous operation. However, repeated switching off and on of the MIRA will greatly reduce bottle life due to the amount of air that is required to cool down the system. The exit vent in the nozzle of the bottle engages the tubular probe in the bottle housing when the bottle is fitted. A flange on the nozzle provides the surface to which the locking bars on the bottle housing engage and lock the bottle in position. Coloured plastic protective caps are provided to assist in identification of charged/discharged bottles. When the bottle is not fitted to MIRA the plastic cap must always be in position on the nozzle. Failure to do this greatly increases the chance of dirt or dust collecting on the exit vent and thereby being forced into MIRA when the system is switched on.This will result in contamination of the interior of MIRA and will produce a poor infra-red picture or no picture at all.

01123. ***Tactical Containers*** *(see* Fig 18). *Explain and demonstrate:* Two types of tactical containers are issued, a steel box and a plastic tube.

a. *The Steel Box.* The box holds 12 bottles, each in a recess within the rubber filling. Two carrying handles are provided and the lid is opened by means of two quick release catches. Flanges at each corner of the box assist in giving stability when they are stacked. The weight of the box when packed is 15 kilogrammes.

b. *The Plastic Tube.* The tube contains two bottles, access to the bottles is gained by removing the screw on end covers. A carrying strap is provided, and attached to the body of the tube is the manufacturer's label which displays the NATO stock number and the serial number of the tube. The weight of the tube when packed is 3.3 kilogrammes.

01124. *Confirm by questions.*

01125. ***Safety Precautions — High Pressure Air Bottles.*** *Explain and demonstrate:* Before any attempt is made to use a bottle it must be inspected for serviceability, as follows:

a. Ensure that the valve head is not loose.

b. Ensure that there are no dents or fractures in the bottle casing.

c. Ensure that there are no deep scratches in the paintwork.

d. Under no circumstances are defective bottles to be used even for instructional purposes.

e. Defective bottles must be disposed of to unit REME immediately. Failure

to do this could result in a bottle exploding and thus injuring the MILAN team or bystanders.

01126. *Confirm by questions and practice.*

01127. ***Lithium Batteries*** *(see* Fig 19). Explain and demonstrate: There are two sizes of lithium batteries available; a 2 hour battery and a 4 hour battery.Both types are similar in construction and consist of a hardened plastic exterior with female terminals on one side. The 2 hour battery has two terminals and the 4 hour battery four terminals (two at either end of the centre section). It follows that the 4 hour battery is two, 2 hour batteries combined together. The 2 and 4 hour battery life is the minimum expected and often five hours will be obtained from a 2 hour battery.

01128. ***Safety Precautions — Lithium Batteries.*** *Explain and demonstrate:* Depending on their exact type, lithium batteries may be dangerous. They may explode (particularly if short circuited) or vent toxic gases. Whatever the type, lithium batteries must not be punctured, exposed to excessive heat or short circuited. When expended they should be back-loaded through the unit REME in cool, dry and well ventilated conditions. Under no circumstances are lithium batteries to be disposed of under local conditions, e.g., by burying, etc. Before attempting to use a lithium battery it must be inspected for serviceability, as follows:

a. Inspect the battery for cracks, dents or bulges in the battery casing.

b. Defective batteries should never be used. (Not even for instructional purposes).

01129. *Confirm by questions.*

01130. ***External Power Supply.*** *Explain:* It is possible to operate the MIRA from an external power supply of 24 volts DC, this will conserve supplies of lithium batteries. The external power supply apparatus consists of a 24 volts DC to DC converter with supporting cables.

01131. ***24 Volts DC to DC Converter*** *(see* Fig 20). *Explain and demonstrate:* The converter works from any external voltage of 24 volts DC and will reduce this power to 7 volts DC required by MIRA. Two connections are positioned on the working face, the one marked 24 volts accepts the external power supply cable and the one marked 7 volts accepts the MIRA to converter interface cable. A green 'power on' lamp is situated on the right side. An 'On/Off' switch is also provided. The interface cable consists of a representative battery for fitment to the MIRA and a length of cable terminating in a connection which will only fit to the connection marked 7 volts on the converter. The external supply cable terminates in two crocodile clips, one coloured red for attachment to the positive terminal of the external battery and the other coloured blue for attachment to the negative terminal of the external battery. Alternatively a Clansman battery fitting may be provided.

01132. *Confirm by questions.*

01133. ***Carrying Bag*** *(see* Fig 21). *Explain:* The carrying bag is made of nylon,an adjustable shoulder strap and two carrying handles are provided. Velcro is used to secure the lid and internal stiffeners provide the bag with rigidity. Compartments inside provide for the carriage of two bottles, and three 2 hour batteries as well as the MIRA and the MILAN cleaning kit. If desired a further one bottle and one 2 hour battery can be carried in the bag by attaching them to the MIRA. MIRA should only be transferred to the carrying bag (from the tactical container) immediately before deployment on foot to reduce the chances of damage.

01134. *Confirm by questions.*

01135. ***Stripping of Equipment.*** *Explain:* Apart from the removal and replacement of bottles and batteries, no stripping of the MIRA or any of its associated equipments is permitted. This is strictly a REME task.

Conclusion

01136. ***End of Lesson Drill.***

a. *Confirm the complete lesson.*

b. *Pack kit.*

c. *Summarize the main points.*

d. *Stress the following points:*

(1) *The importance of a thorough knowledge of the basic components of the equipment, and their functions before introduction to the handling drills and operating techniques.*

(2) *The importance of the safety inspections as applied to the high pressure air bottles and lithium batteries.*

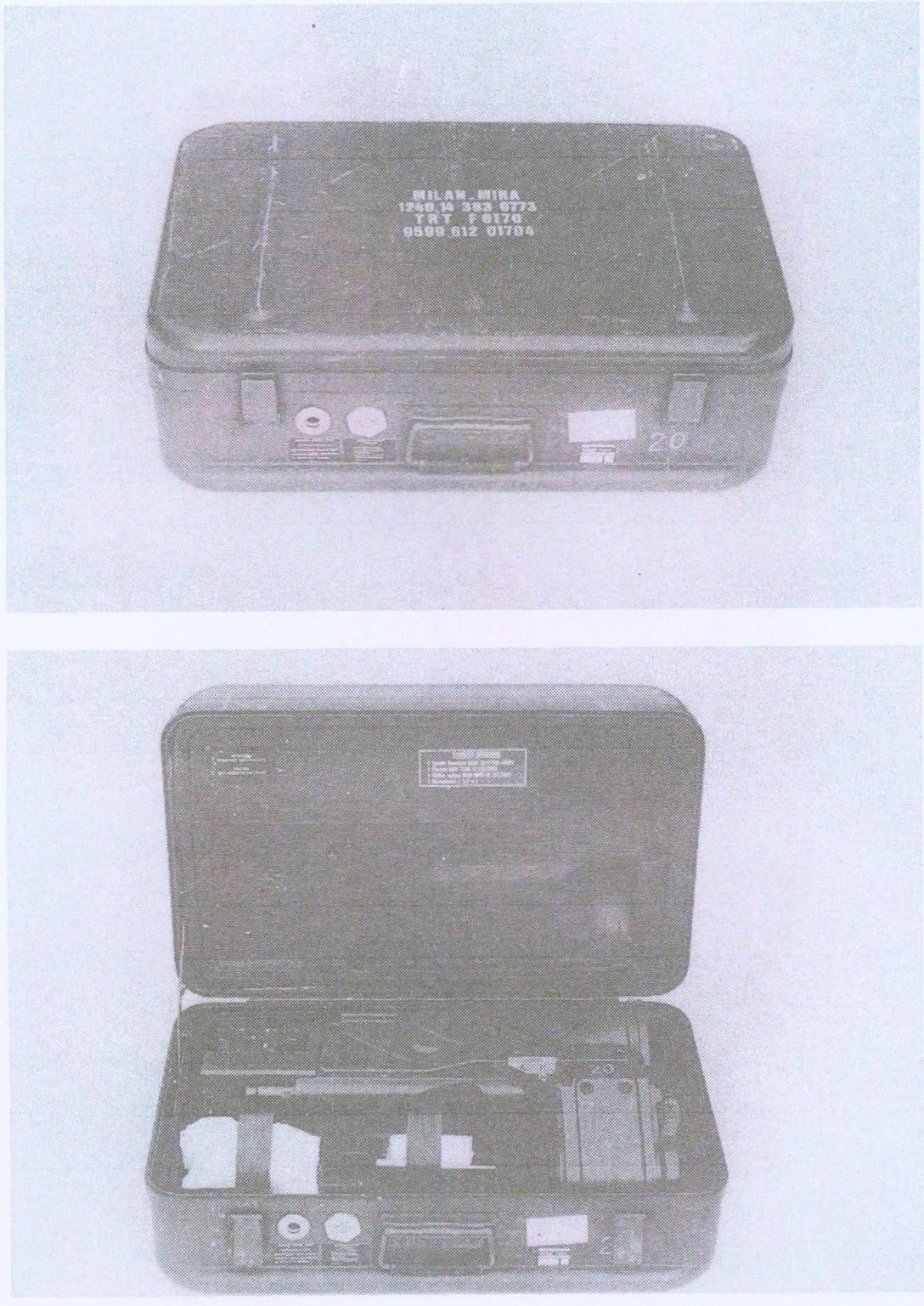

Fig 15. — MIRA Tactical Container

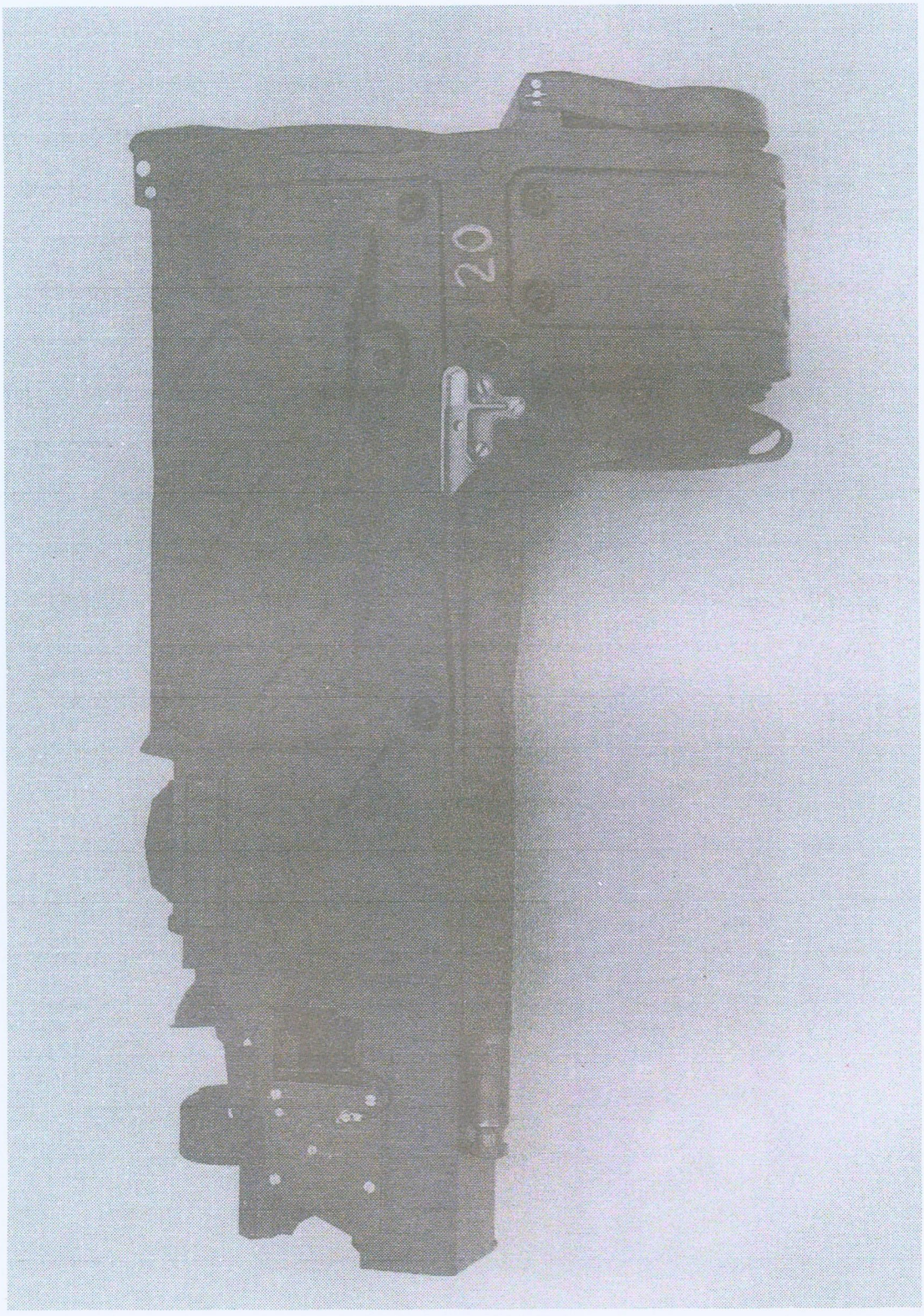

Fig 16. — MIRA

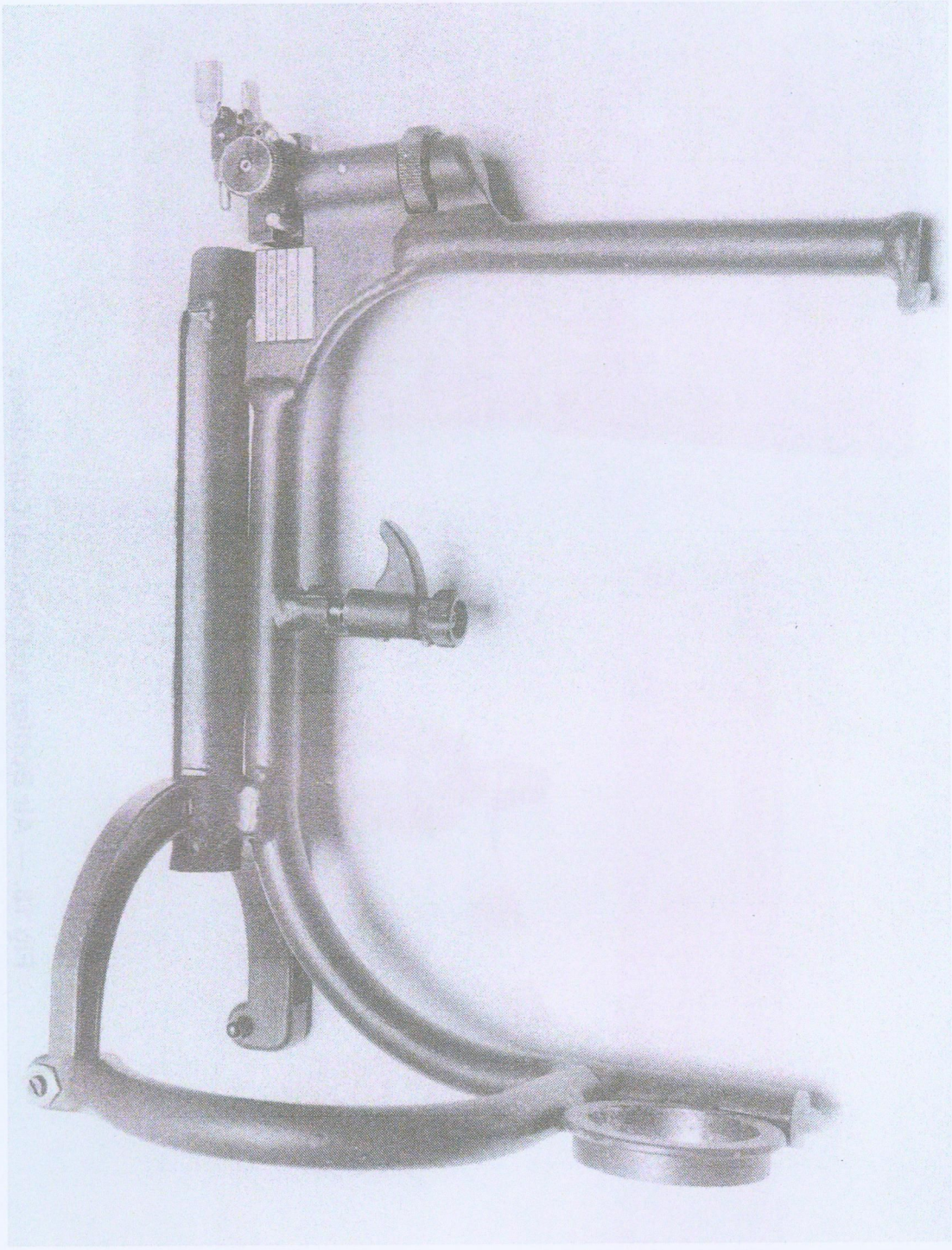

Fig 17. — MIRA Mounting Bracket

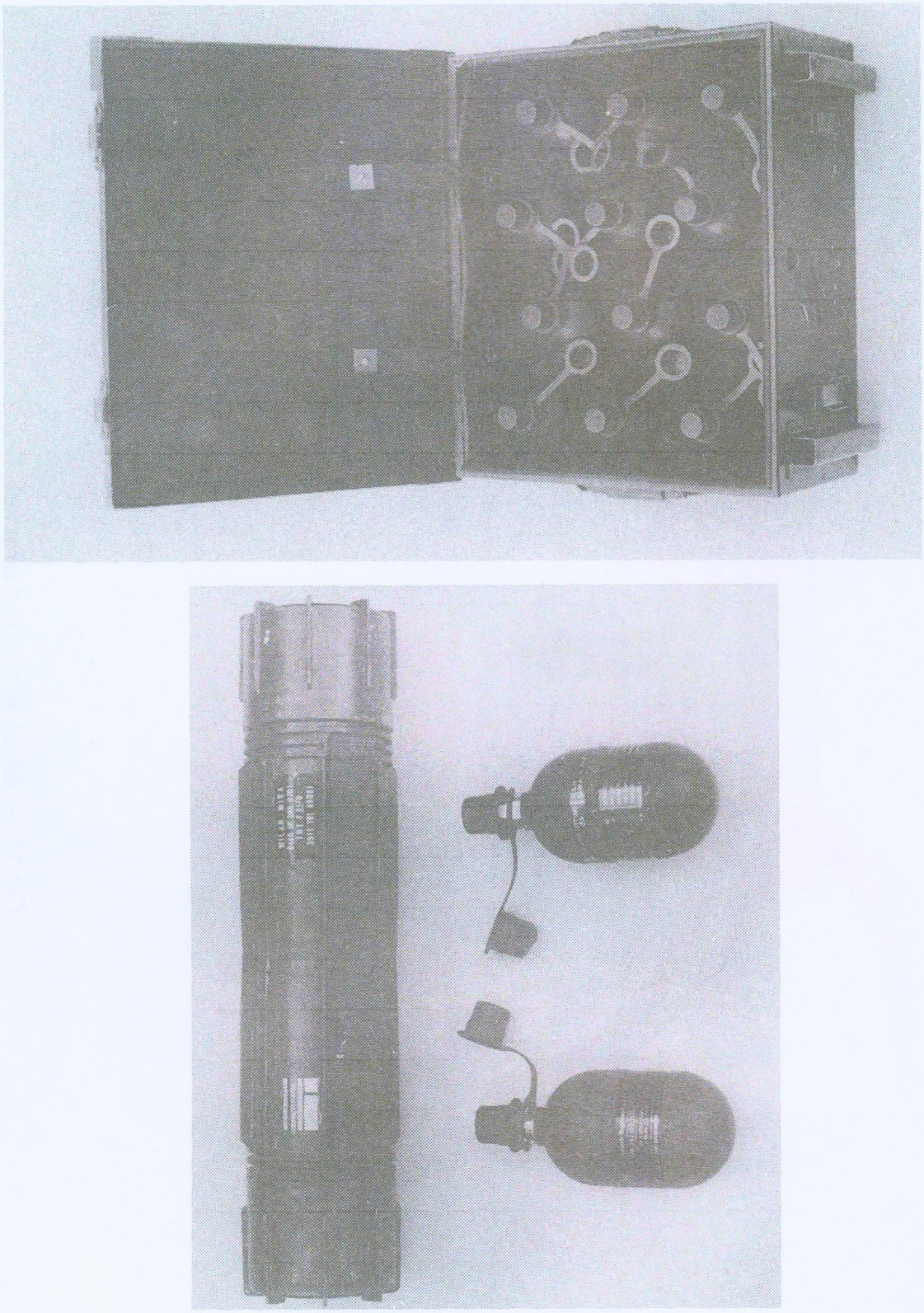

Fig 18. — Air Bottles and Tactical Containers

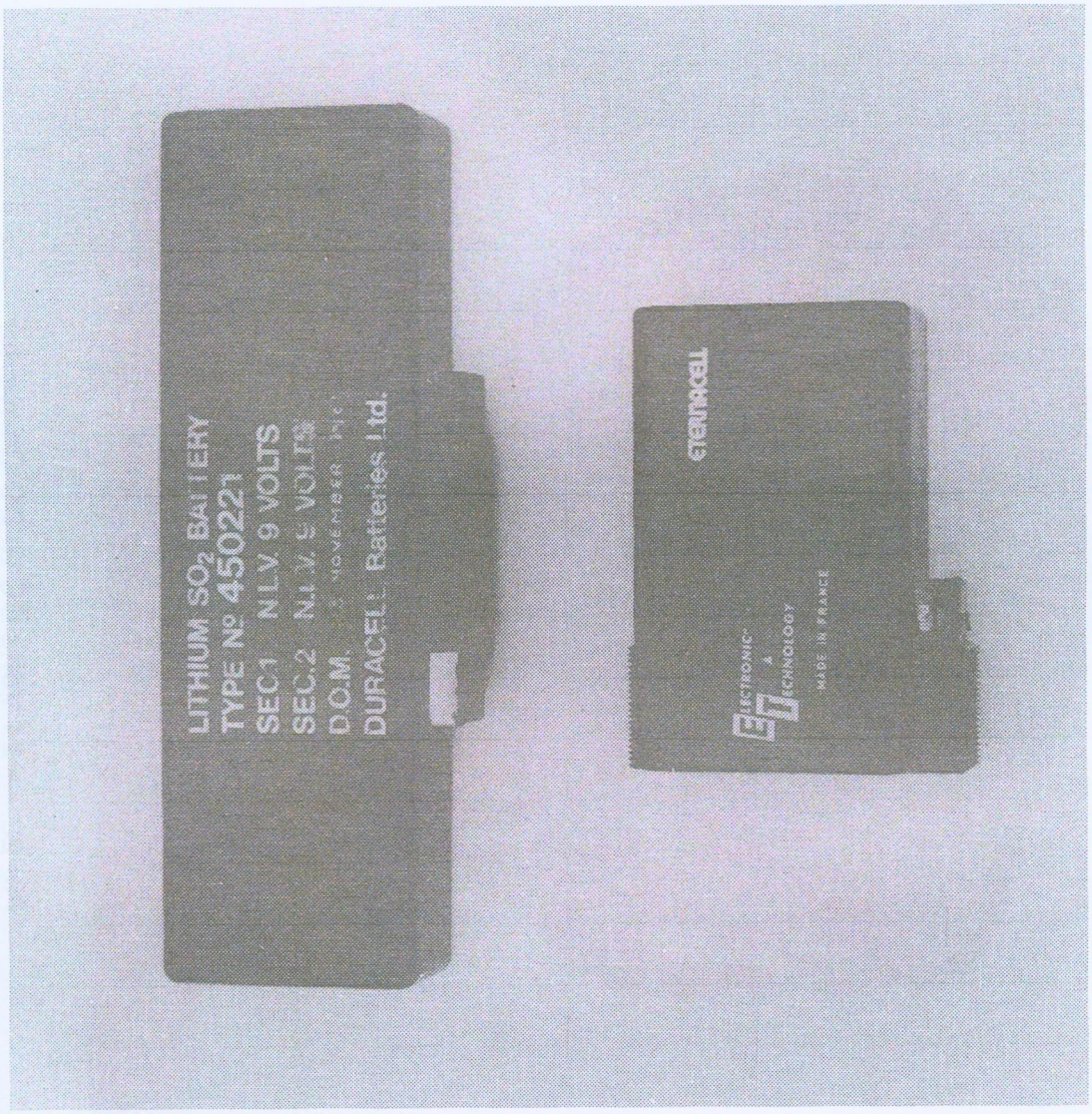

Fig 19. — Lithium Batteries

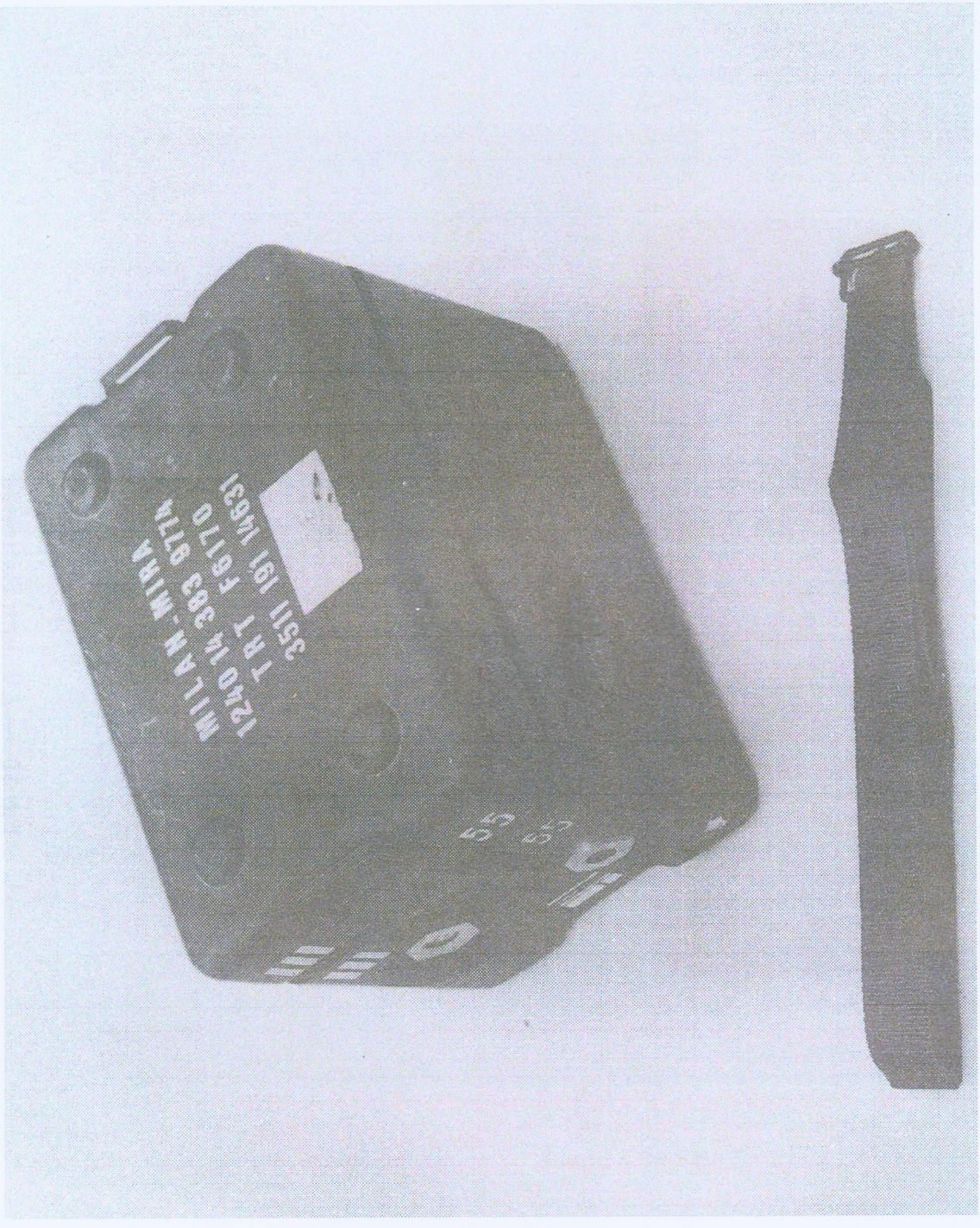

Fig 20. — 24 Volts DC to DC Converter

Fig 21. — Carrying Bag

LESSON 5. — AMMUNITION AND LOGISTIC CONTAINER

A. INSTRUCTOR'S NOTES

01137. ***Aim.*** *To teach:*

a. *The normal safety precautions.*

b. *The description and recognition of different ammunition natures.*

c. *The unpacking and packing of the ammunition logistic container.*

01138. ***Timings.*** *Two 40 minute periods.*

01139. ***Method.*** *A basic instructional indoor lesson.*

01140. ***Stores.***

One ammunition logistic container
One instructional ammunition tube HEAT
Five drill ammunition tubes
One instructional MILAN missile
Drop or Vufoil of:
Fig 22, Ammunition Logistic Container Markings (103 mm Warhead)
Fig 23, Ammunition Logistic Container Markings (K115 Warhead)
Fig 24, Ammunition Tube Markings (103 mm Warhead)
Fig 25, Ammunition Tube Markings (K115 Warhead)
Fig 26, Ammunition Tube and Missile Sectionalized (103 mm Warhead)
Fig 27, Ammunition Tube and Missile Sectionalized (K115 Warhead)
Overhead projector and screen

01141. ***Preparation.*** *Ensure that the logistic container is correctly packed and the ammunition tubes are of an inert nature. The remaining aids should be ready for use but kept out of sight until required. Seating arranged in a semi-circle.*

01142. ***Miscellaneous.*** *It will be necessary for units to manufacture their own drill and instructional ammunition tubes from fired ammunition. Detailed guidance for this process is contained in Chapter 6, Section 8.*

B. CONDUCT OF THE LESSON

Preliminaries

01143. ***Safety Precautions.*** *Explain that all ammunition tubes and missile parts have been inspected prior to the lesson and are all of a drill, inert or instructional nature. The safety precautions to be carried out will be taught during this lesson.*

Introduction

01144. *Explain:* It is essential that all members of the MILAN platoon are able to recognize each ammunition nature and understand the main components of the ammunition and their basic function. This will help the soldier to realize the importance of the handling drills taught in later lessons.

The Logistic Container

01145. ***Description.*** *Explain and demonstrate:* The ammunition is packed in a logistic container made of reinforced plastic which contains four ammunition tubes.The total weight of the packed container is 82 kilogrammes for 103 mm and 84 kilogrammes for K115 mm missiles, the volume is 0.383 cubic metres. Coloured bands, painted at opposite corners so that they are visible from all angles, indicate the nature of the ammunition. The container is fitted with eight spring loaded carrying handles. Male and female mouldings on the upper and lower surfaces are provided to aid the stacking of containers. The lid is secured to the container by four quick release catches. The yellow mark on the lid and the corresponding one on the body, when they are in line, indicate the correct fitting of the lid. The container is pressurized and it is necessary to equalize pressure before the lid is removed. The pressure release valve is positioned in the centre of the lid. The metal lever, taped to the lid, is used to unfasten the lid catches.

01146. *Confirm by questions.*

01147. ***Recognition.*** *Explain and demonstrate the recognition features of 103 mm and K115 HEAT ammunition and all other markings on containers using a drop or vufoil of Figs 22 and 23. Explain:* Logistic containers used to store Drill and instructional ammunition tubes are to be marked as follows:

a. All markings, less the lid positioning mark, weight and volume details and the self propelled ammunition symbol are to be overpainted using olive drab.Labels are to be removed and care must be taken to ensure that nothing remains which might indicate a live store.

b. Both sides of the container are to be marked '4 GM MILAN INERT/ INSTRUCT' or '4 GM MILAN DRILL' as appropriate in white letters of the same size as original markings (30 millimetres).

01148. *Confirm by questions.*

Unpacking and Repacking the Ammunition

01149. ***Unpacking.*** *Explain and demonstrate:* To remove the ammunition tubes from the container:

a. Press the valve until pressure has been equalized.

b. Unfasten the catches and remove the lid.

c. Slide out the pallet containing four ammunition tubes.

d. Remove the bundle of four shoulder straps.

e. Unhook the two retaining straps and lift one tube clear.

01150. *Get the squad to remove the other three tubes.*

01151. ***The Pallet.*** *Explain and demonstrate:* The pallet consists of two shaped wooden brackets, with rubber protective strips, separated by two metal spacers each fitted with two canvas carrying handles. White marks on the top and bottom of the pallet indicate the correct 'line up' for return to the container. The numerous small white arrows on each side of the wooden brackets indicate the direction in which the ammunition tubes are fitted to ensure correct, compact stowage.

01152. *Confirm by questions.*

01153. ***Repacking the Pallet.*** *Explain and demonstrate:* All ammunition tubes must face the same way and must be fitted to the pallet with the junction boxes towards the direction indicated by the small white arrows.

01154. *Get the squad to repack the remaining ammunition tubes.*

01155. ***Returning the Pallet to the Container.*** *Explain and demonstrate:* Line up the white marks on the top of the pallet with the white mark on the container and slide the pallet into the container. Repack the shoulder straps. Replace and secure the lid. Finally retape the metal lever to the lid.

01156. *Confirm by practice ending with the ammunition tubes packed.*

The Ammunition Tube

01157. ***Function.*** The ammunition tube protects the missile in storage and transit and acts as a launcher when the missile is fired, it also houses the components that are required to fire the missile.

01158. ***Description.*** *Explain and demonstrate, using the instructional ammunition tube:* The ammunition tube is made of reinforced fibre glass and weighs approximately 12 kilogrammes. The small arrows at each end of the tube correspond to the arrows on the end covers. Three protective covers are fitted to the tube, one at each end and one enclosing the components attached to the outside of the tube. Each is fastened by means of velcro strips but the one covering the centre

portion of the tube is also secured by two canvas straps with quick release fasteners.Metal clips fitted to the straps are used to attach the shoulder straps to the tube which, along with the carrying handle positioned on top of the tube, assist in the carriage of the ammunition.

01159. *Confirm by questions.*

01160. ***Removing and Replacing the Covers.*** *Explain and demonstrate:* The end covers are removed by releasing the velcro and pulling the covers off the tube. To remove the centre cover, release the two fasteners and peel off the cover. To replace the centre cover, secure it by means of the velcro and then fasten the two straps. To replace the end covers, align the corresponding arrows and fasten the velcro.

01161. *Confirm by practice. End the practice with the covers removed.*

01162. ***Recognition.*** *Explain and demonstrate the recognition features of 103 mm and K115 HEAT ammunition and all other markings on the ammunition tube using a drop or vufoil of Figs 24 and 25.*

01163. *Confirm by questions.*

01164. ***Detailed Description.*** *Explain and demonstrate:* The ammunition tube is reinforced internally at the front by a metal stop ring and is covered by a plastic membrane. The main components of the ammunition tube are the junction box, latching box, gas generator, piston and missile.

01165. *Confirm by questions.*

Main Components, External

01166. ***The Junction Box.*** *Explain and demonstrate the following points, using an instructional ammunition tube:*

a. *Function.* The junction box provides the power required by the firing post throughout the missile's flight. On firing, the junction box remains attached to the support assembly when the ammunition tube is ejected rearwards. This enables a link to be maintained between the firing post and the missile.

b. *Description.* The junction box is secured to the ammunition tube by means of four plastic retaining pins and a locking plunger which protrudes into the latching box. The clear plastic cover protruding from the front of the junction box protects part of the guidance wire. The metal spring clip on the plastic cover is one of the means of securing the junction box to the support assembly. Positioned beneath the spring clip is an anti-snatch device which prevents the guidance wire from breaking when the missile is fired. The tube shaped

part of the junction box contains a thermal battery and a female electrical socket, which matches with the male connector on the guidance electronics pack. On either side of the junction box are flanges, in one of which there is a recess. Above the flanges are two guide ribs which, along with the recess in the flange and the spring clip on the plastic cover, complete the locking of the ammunition tube. Prior to firing the junction box is attached to the latching box by means of a six pin plug.

01167. *Confirm by questions.*

01168. ***The Latching Box.*** *Explain and demonstrate using an instructional ammunition tube:*

a. *Function.* Inside the latching box is a latching plunger. The latching plunger ensures that the missile remains locked in the ammunition tube during transit and storage. A short circuit in the latching box ensures that the missile cannot be fired until the latching plunger unlocks the missile.

b. *Description.* The latching box is situated between the rear end of the junction box and the ammunition tube. Attached to it is a flexible firing circuit that is protected by a metal or foam cover. The flexible firing circuit passes power to the missile and to the gas generator by means of a gas generator ignition wire.

01169. *Confirm by questions.*

Main Components, Internal

01170. ***The Gas Generator and Piston.*** *Explain and demonstrate, using an instructional ammunition tube or a drop/vufoil of Fig 26 or 27:*

a. *Function.* When the gas generator is activated, it produces gases that force the piston forward and ballistically launch the missile. Some of the gases pass through the piston and ignite the missile's rocket motor.

b. *Description.* The gas generator is positioned in the rear of the tube. Attached to the gas generator are three vanes which assist in the rear ejection of the ammunition tube when the missile is fired. The piston is positioned in front of the gas generator and is attached to the missile by three spring clips.

01171. *Confirm by questions.*

01172. ***The Missile.*** *Explain and demonstrate, using a drop/vufoil of Fig 26 or 27:* The missile is contained within the ammunition tube, its function is to convey the warhead to the target. The missile has three main components:

a. *The 103 mm Warhead.* This is of the hollow charge type with a diameter

of103 millimetres and contains 1.45 kilogrammes of explosive. It is electrically armed and initiated but a mechanical safety device ensures its safety during transportation and storage.

b. *The K115 Warhead.* This is also of the hollow charge type with a diameter of 115 mm and contains 2.63 kilogrammes of explosive. The warhead has a direct and graze action fuse and will function on either action. The warhead is electrically armed and contains the same safety element found in the 103 mm missile.

c. *The Centre Section.* This contains the rocket motor and the fin assembly. The fins are offset and cause the missile to rotate, this assists in stabilizing the missile during flight. Prior to firing the fins are folded and held in place by the fin retaining ring.

d. *The Rear Section.* This consists of a light alloy cylinder around the outside of which is the guidance wire. Within the alloy cylinder are the day and night tracer flares and the components necessary to impart missile response to guidance commands sent along the guidance wire.

01173. *Confirm by questions.*

Normal Safety Precautions

01174. *Explain that all ammunition tubes and missile parts should be inspected by the instructor prior to the lesson. Explain and demonstrate, using the additional drill,instructional ammunition tubes and inert missile:* Whenever ammunition tubes are used for instruction or drill, they are to be inspected to ensure that they are of an inert nature. The following checks are to be carried out:

a. *Drill.* Check that the word 'DRILL' is stencilled, in white letters, on a blue band around the ammunition tube and on the thermal battery part of the junction box. With the exception of the 'self propelled' symbol and small white arrows,there should be no other markings on the tube.

b. *Instructional.* Check that 'INERT/INSTRUCT' is stencilled alongside the carrying handle on both sides of the tube and along the thermal battery part of the junction box.

c. *Missile Parts.* Check that 'INERT/INSTRUCT' is stencilled on the centre section of any missile and 'INERT' on all other separate missile parts.

01175. *Confirm by questions.*

part of the junction box contains a thermal battery and a female electrical socket, which matches with the male connector on the guidance electronics pack. On either side of the junction box are flanges, in one of which there is a recess. Above the flanges are two guide ribs which, along with the recess in the flange and the spring clip on the plastic cover, complete the locking of the ammunition tube. Prior to firing the junction box is attached to the latching box by means of a six pin plug.

01167. *Confirm by questions.*

01168. ***The Latching Box.*** *Explain and demonstrate using an instructional ammunition tube:*

a. *Function.* Inside the latching box is a latching plunger. The latching plunger ensures that the missile remains locked in the ammunition tube during transit and storage. A short circuit in the latching box ensures that the missile cannot be fired until the latching plunger unlocks the missile.

b. *Description.* The latching box is situated between the rear end of the junction box and the ammunition tube. Attached to it is a flexible firing circuit that is protected by a metal or foam cover. The flexible firing circuit passes power to the missile and to the gas generator by means of a gas generator ignition wire.

01169. *Confirm by questions.*

Main Components, Internal

01170. ***The Gas Generator and Piston.*** *Explain and demonstrate, using an instructional ammunition tube or a drop/vufoil of Fig 26 or 27:*

a. *Function.* When the gas generator is activated, it produces gases that force the piston forward and ballistically launch the missile. Some of the gases pass through the piston and ignite the missile's rocket motor.

b. *Description.* The gas generator is positioned in the rear of the tube. Attached to the gas generator are three vanes which assist in the rear ejection of the ammunition tube when the missile is fired. The piston is positioned in front of the gas generator and is attached to the missile by three spring clips.

01171. *Confirm by questions.*

01172. ***The Missile.*** *Explain and demonstrate, using a drop/vufoil of Fig 26 or 27:* The missile is contained within the ammunition tube, its function is to convey the warhead to the target. The missile has three main components:

a. *The 103 mm Warhead.* This is of the hollow charge type with a diameter

Conclusion

01176. ***End of Lesson Drill.***

a. *Confirm the complete lesson.*

b. *Pack kit.*

c. *Summary. To include the following:*

(1) *How to recognize different natures of ammunition.*

(2) *The main component parts of the ammunition and their basic function.*

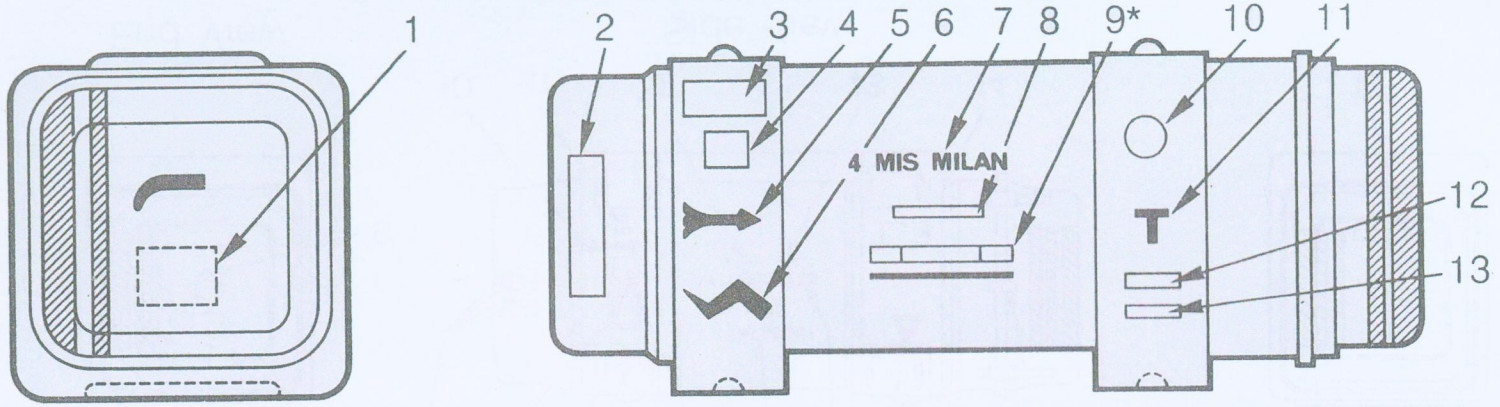

*The batch No. can be changed and placed under the line

1. Label
2. Ammunition manufacturing No.
3. Designation and NATO code No. (container empty)
4. Storage temperature limits
5. 'Self propelled ammunition' symbol
6. 'Electrical Fuze' symbol
7. Designation
8. NATO code No.
9. Ammunition batch No. (underlined)
10. Operating temperature limits
11. Tracer indication
12. Weight (kg)
13. Volume (m^3)
14. Lid positioning mark
15. 2nd strip
16. 1st strip

Note: Markings 2 to 13 are provided on both sides

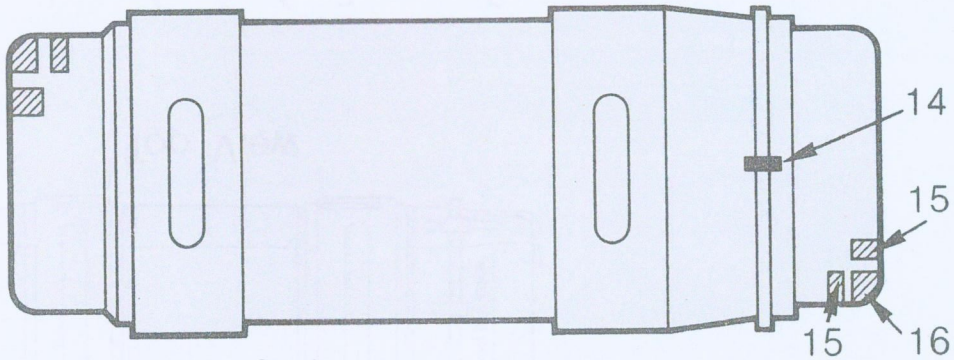

Colour Code

Missile Warhead	1st Strip	2nd Strip	Markings
LIVE	BLACK	BROWN	YELLOW

Fig 22. — Ammunition Logistic Container Markings (103 mm Warhead)

RESTRICTED

1. Missile serial Nos numbers
2. Stowage temperature limits
3. Identification plate
4. Operational temperature limits
5. Missile designation
6. NATO stock number (container and contents)
7. Ignition device symbol
8. Linen seal
9. Explosive hazard label
10. Self propelled missile symbol
11. Flare/tracer symbol
12. Month and year of manufacture
13. Batch number (munition)
14. Weight (kg) / volume (m^3)
15. UN serial number

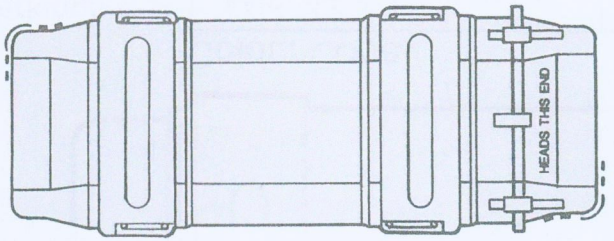

Top View

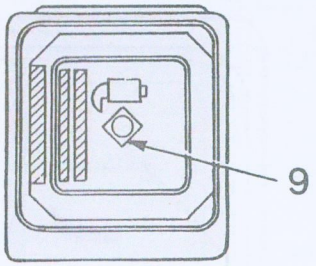

End View

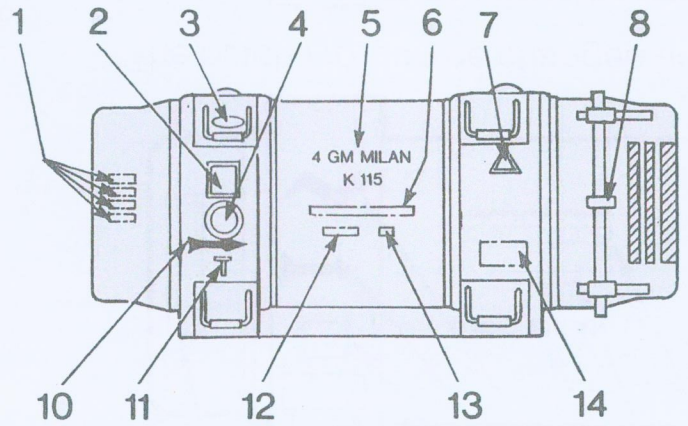

Side View

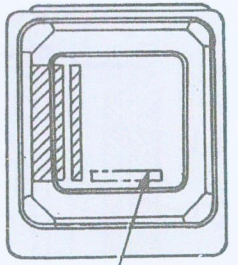

Fig 23. — Ammunition Logistic Container Markings (K115 Warhead)

RESTRICTED

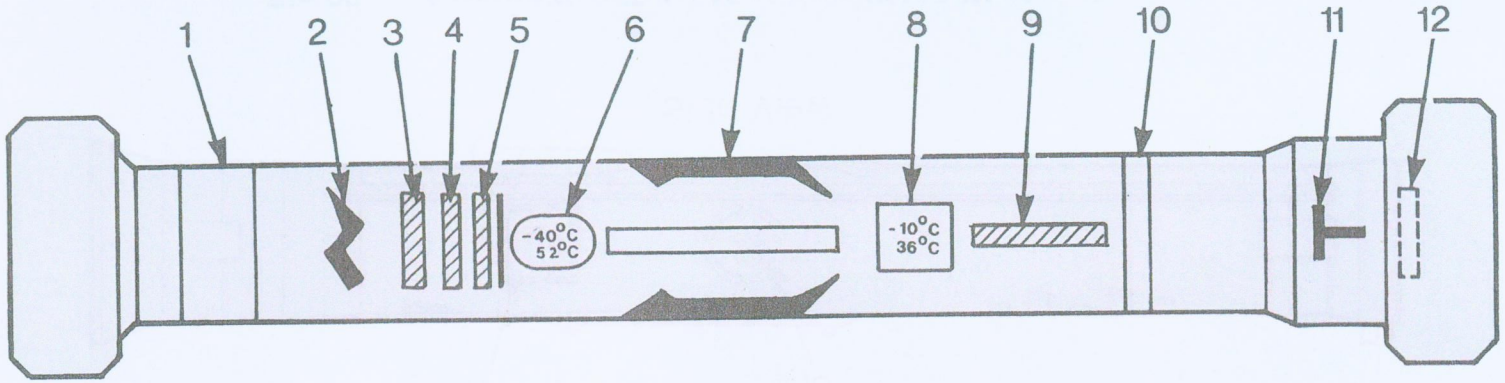

1. Front ring
2. 'Electrical Fuze' symbol
3. Designation
4. Missile production No.
5. Ammunition batch No. (underlined)
6. Operating temperature limits
7. 'Self propelled ammunition' symbol
8. Storage temperature limits
9. NATO code No.
10. Rear ring
11. Tracer indication (3 times)
12. Tube production batch No. (under rear cover)

Colour Code

Missile Warhead	Front Ring	Rear Ring	Markings
LIVE	BLACK	BROWN	YELLOW

Fig 24. — Ammunition Tube Markings (103 mm Warhead)

RESTRICTED

1. Flare/tracer symbol
2. NATO stock No.
3. Ignition device symbol
4. Self propelled missile symbol
5. Missile serial
6. Munition batch No.
7. Missile designation
8. Manufacturers details
9. Storage temperature limits
10. Operational temperature limits
11. Rear ring
12. Front ring

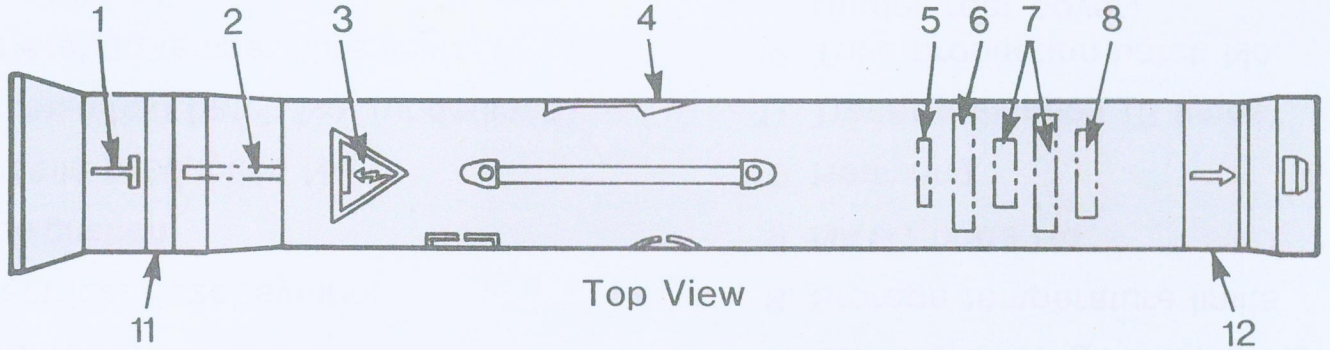

Top View

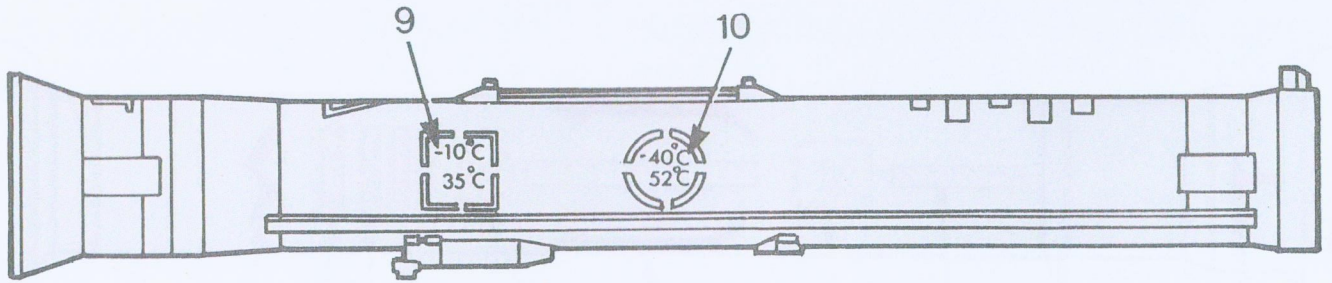

Side View

Fig 25. — Ammunition Tube Markings (K115 Warhead)

RESTRICTED

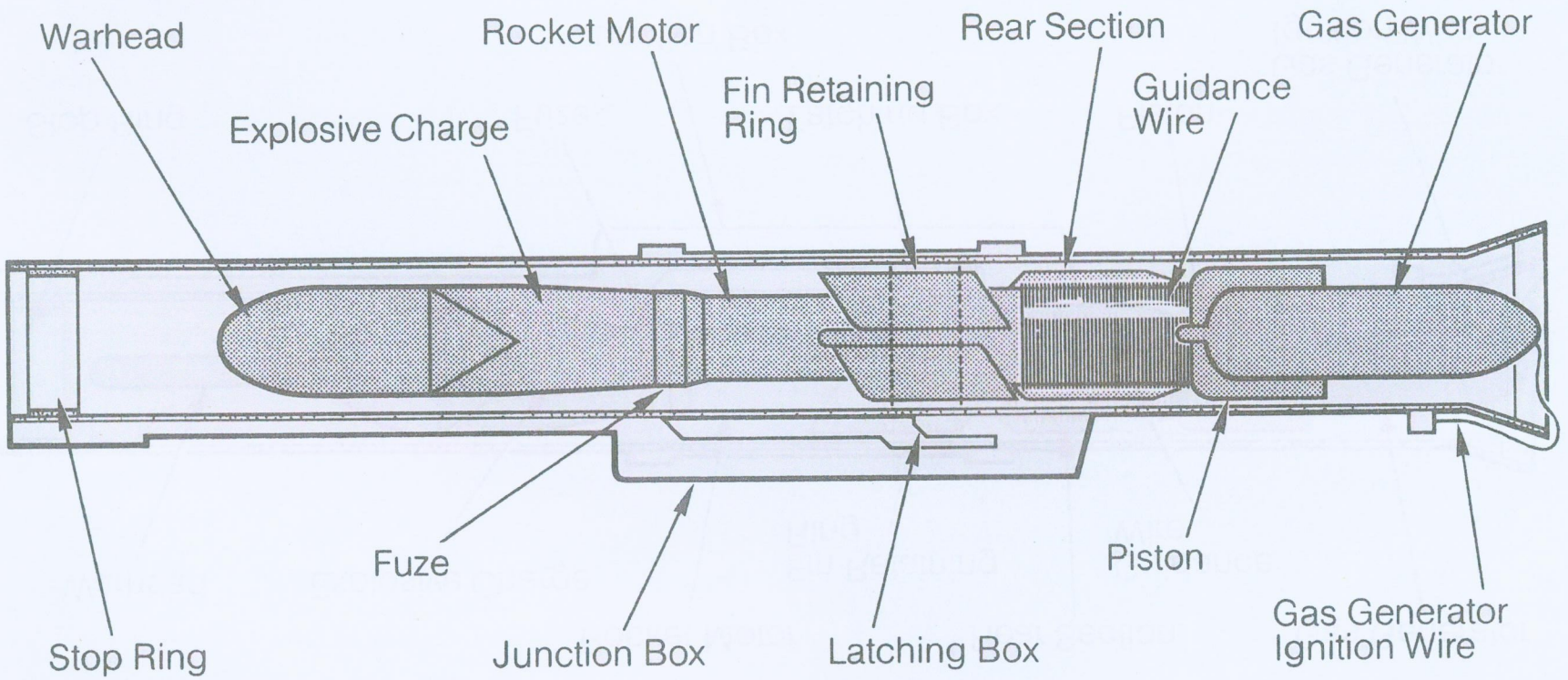

Fig 26. — Ammunition Tube and Missile Sectionalized (103 mm Warhead)

RESTRICTED

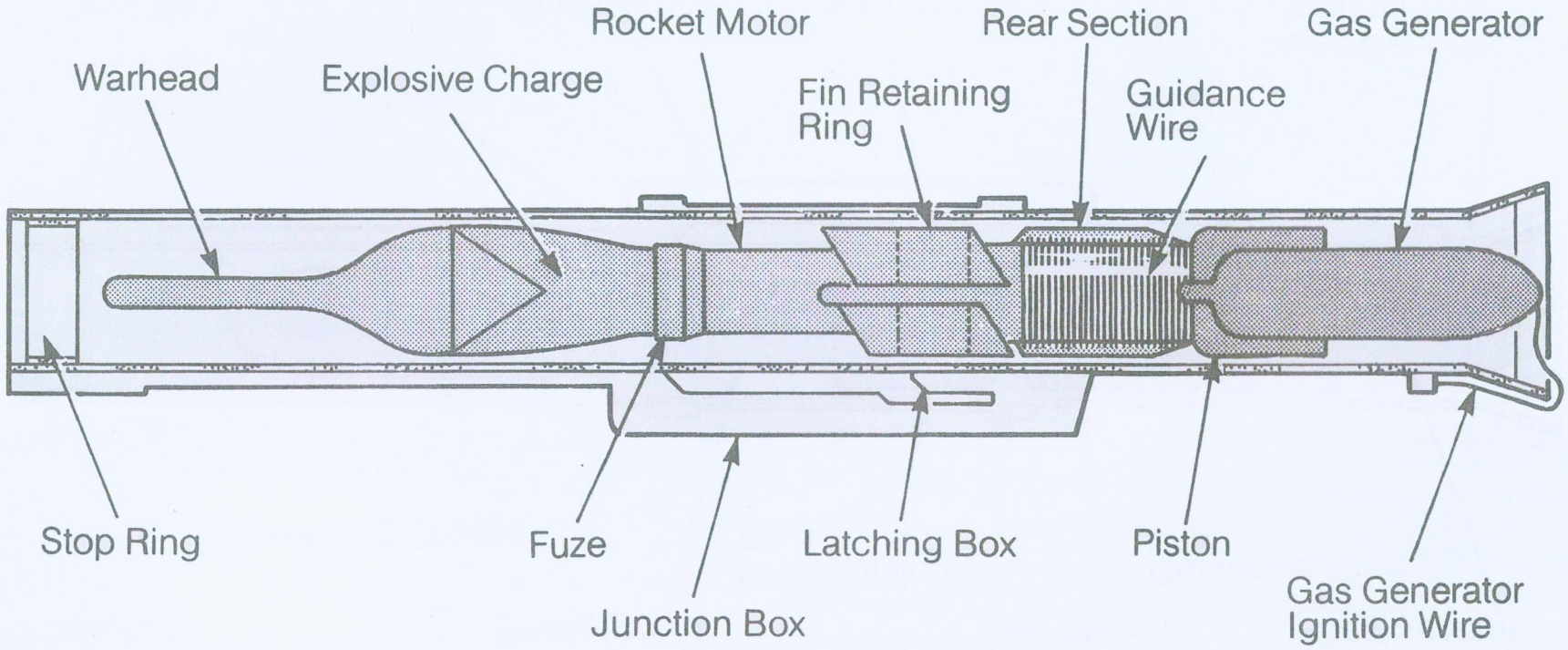

Fig 27. — Ammunition Tube and Missile Sectionalized (K115 Warhead)

LESSON 6. — FIRING SEQUENCE AND BASIC GUIDANCE

A. INSTRUCTOR'S NOTES

01177. ***Aim.*** *To teach the firing and launch sequence, including the safety features, and the basic guidance of the MILAN.*

01178. ***Timings.*** *Two 40 minute periods.0*

01179. ***Method.*** *A basic instructional indoor lesson.*

01180. ***Stores.***

One firing post
One instructional ammunition tube with detachable junction box
One instructional MILAN missile
Drops or vufoils of:
Fig 26, Ammunition Tube and Missile Sectionalized (103 mm Warhead)
Fig 27, Ammunition Tube and Missile Sectionalized (K115 Warhead)
Fig 28, Second Safety
Fig 29, Third Safety
Fig 30, Missile Launch Sequence
Fig 31, Goniometer Sensing Fields
Fig 32, Basic Guidance
Fig 33, Missile Flight
Overhead projector and screen

01181. ***Preparation.*** *Firing post set up on the table. Aids laid out in sequence but out of sight. Overhead projector set up with vufoils in sequence. Seating arranged for the squad. Ensure that all ammunition components are of an inert or instructional nature.*

B. CONDUCT OF THE LESSON

Preliminaries

01182. ***Safety Precautions.*** *Explain that all ammunition tubes and missile parts have been checked and are of an inert or instructional nature.*

01183. ***Revision.*** *Revise the major components of the firing post and ammunition and their basic functions. End with the instructional tube loaded.*

Introduction

01184. *Explain:* To give the soldier confidence while handling the ammunition, it is important that he understands the safety features built into the ammunition and how they function during the firing and launch sequence. Once the missile is launched, he needs to understand how the MILAN guidance system works so that he realizes the importance of the points of aim and engagement drills taught in later lessons.

Mechanical Relationships

01185. *By teaching questions, illustrate the following mechanical relationships:*

a. Spring clip — machined groove.

b. Ball lugs — guide ribs.

c. Latch — latch recess.

d. Junction box — ammunition tube.

e. Latching plunger — missile.

f. Gas generator — piston missile.

Electrical Links

01186. *By teaching questions, illustrate the following electrical links:*

a. Safety flap in the 'Safe' position — open circuit known as first safety.

b. Tracker to guidance electronics pack — closed circuit.

c. Ammunition tube to guidance electronics pack — closed circuit.

d. Junction box to latching box — closed circuit.

e. Latching box to gas generator — open circuit.

f. Fuse contacts in warheads — open circuit.

01187. *Explain there are other electrical connections which will be pointed out later.*

Firing Sequence

01188. *Explain and demonstrate:* When the safety flap is moved to the 'Fire' position, the mechanical safety element within the firer's hand grip is closed. This

allows power, when generated, to pass through the guidance electronics pack to the junction box. On pressing the firing button an electrical pulse is generated and transmitted to the junction box. This initiates the thermal battery which produces electricity; it is this electricity which powers the firing post. Once 20 volts is reached a pulse is sent via the flexible firing circuit into the rear of the missile. This first pulse activates the missile battery, gyroscope and night tracer. The activation of the missile has now begun but it is still locked inside the ammunition tube by the latching plunger. Approximately one second after the first impulse was sent to the missile another one is sent into the latching box via the six pin plug. This pulse ignites a small charge which activates the second safety device by producing gasses which cause the latching plunger to move downwards. This downward movement causes the following actions to take place *(see* Fig 28):

a. The unlocking of the missile.

b. The unlocking of the latching box from the junction box by means of the latching plunger pushing a locking plunger downwards.

c. The completion of the circuit between the latching box and the gas generator via the flexible firing circuit and gas generator ignition wire.

d. If the day/night switch is so positioned the activation of the day tracer in the missile.

01189. The missile is now unlocked and with the exception of the rocket motor being activated is fully conditioned for launching. The ammunition tube is unlocked from the junction box and the gas generator is about to be ignited.

01190. *Confirm by questions.*

Launch Sequence

01191. *Explain and demonstrate:* When the gas generator is activated the majority of the gasses produced force the piston forward, at the same time a jet of gas is passed through the piston and into the missile igniting the booster part of the rocket motor. As the piston moves forward the following two actions occur:

a. The piston begins to rotate clockwise and as it is attached to the missile by means of three spring clips the missile also rotates clockwise thus initial spin is achieved.

b. The ammunition tube begins to move to the rear.

01192. When the rocket motor is ignited some of the gasses it produces pass through the body of the missile to mechanically arm the fuse. (Activates the third safety *(see* Fig 29).) This ensures that the complete arming of the missile cannot take place until the rocket motor has ignited and the launching of the missile has begun.

01193. Continual forward movement of the missile and rearward movement of the ammunition tube result in the missile leaving the ammunition tube and the fin retaining ring coming into contact with the stop ring. This action strips the fin retaining ring away from the fins and under pressure from springs they are pushed outwards where they are locked into their in flight positions. The fins in this position are off set to assist in the spinning of the missile to give it stability in flight. The missile has now left the tube having been ballistically launched by the gas generator and piston. Once the missile has travelled 20 metres the fourth safety is activated. The guidance wire rips out a short circuit within the rear section of the missile thus electrically arming the fuse.

01194. *Confirm by questions.*

Tube Ejection

01195. *Explain and demonstrate:* At the same time as the missile is being launched the tube is being ejected to the rear *(see* Fig 30). This is caused by a reaction to the piston being pushed forward. Once the tube has disconnected from the junction box it also starts to rotate. As the piston comes into contact with the stop ring it crushes the fin retaining ring and the impact acts as a break to slow down the rear-ward movement of the tube. The tube is slowed down even further by the remaining third of the gas generator still burning and trying to push the piston forward and the three vanes on the gas generator acting as air breaks. Consequently the tube comes to rest approximately three metres behind the firing post when fired from ground level.

01196. *Confirm by questions.*

Guidance

01197. ***Components.*** *Explain:* The missile has now been launched and so long as the firer takes the correct point of aim on, and continually tracks the target, the missile will be guided onto it. The two main components which provide for guidance of the missile are the tracker and the guidance electronics pack.

01198. ***The Tracker.*** *Explain:* The tracker contains an infra-red sensitive goniometer which measures angles. The goniometer can sense an infra-red source within a circular area of 80 mils diameter which is represented in the firer's field of view by the outer extremities of the cross hairs. This area is later reduced to 20 mils diameter and is represented by the 20 mil circle *(see* Fig 31). The tracker is linked to the guidance electronics pack by an electrical connection.

01199. ***The Guidance Electronics Pack.*** *Explain:* The guidance electronics pack receives information from the tracker. It interprets this information and then sends command signals via the guidance wire to the missile *(see* Fig 32).

01200. *Confirm by questions.*

01201. ***Initial Flight.*** *Explain:* When the missile is fired, the goniometer is operating over the whole of the 80 mils sensing field. This enables early missile acquisition and allows for the slight variations in launch angle. When the missile has flown approximately 535 metres, the sensing field is restricted to the 20 mils circle.This reduces the chance of decoying. For the first 75 metres of the missile's flight, no guidance command signals are sent by the guidance electronics pack. At 75 metres the guidance electronics pack automatically signals the missile to climb to reduce the chance of it grounding. The missile climbs to a height of approximately one to two metres above the line of sight and then during the remainder of the missile's flight this distance is gradually reduced.

01202. *Confirm by questions.*

01203. ***In Flight.*** *Explain:* As the centre of the goniometer's sensing field is the same as the centre of the firer's field of view the goniometer can, by detecting the infra-red light emitted by the missile's flare, determine where the missile is in relation to the line of sight. This information is passed from the tracker to the guidance electronics pack. In addition, other commands are automatically sent to the missile to compensate for the effect of gravity and displacement of weight within the missile, due to the burning of the rocket motor. These commands are continuous and necessary to ensure that the missile remains aerodynamic. An elevation correction is also fed in so that the missile gradually moves down until it is flying 0.5 metres above the line of sight and stays there. This is to ensure the brightness of the flare does not obscure the target from the firer *(see* Fig 33).

01204. *Confirm by questions.*

01205. ***Missile Response.*** *Explain:* The commands transmitted by the guidance electronics pack via the guidance wire to the missile decoder are then transmitted to a mechanism at the rear of the missile causing the deflector to move in and out of the jet rom the rocket motor. This causes the missile to change direction in flight as and when required. This action is continuous and ensures that the missile remains on its correct flight path.

01206. ***Action on Impact.*** *Explain:* On impact the nose cone of the missile is crushed, this results in a contact being made in the fuse which detonates the explosive charge. Due to the charge being shaped and set back from the nose of the missile the blast is focussed into a jet. The jet melts its way through the armour and penetrates the interior of the vehicle. A molten metal slug formed from the residue of the cone and parts of the missile can also penetrate the interior of the vehicle by means of the entry hole created by the heat jet.

01207. *Confirm by questions.*

Conclusion

01208. ***End of Lesson Drill.***

a. *Confirm the complete lesson.*

b. *Pack kit.*

c. *Summarize the main points.*

d. *Stress that due to the four safety devices incorporated within the system and ammunition it means the ammunition is completely safe to handle.*

e. *Stress that due to the guidance system and the simplicity of aiming, a very high degree of accuracy is obtained with the MILAN system.*

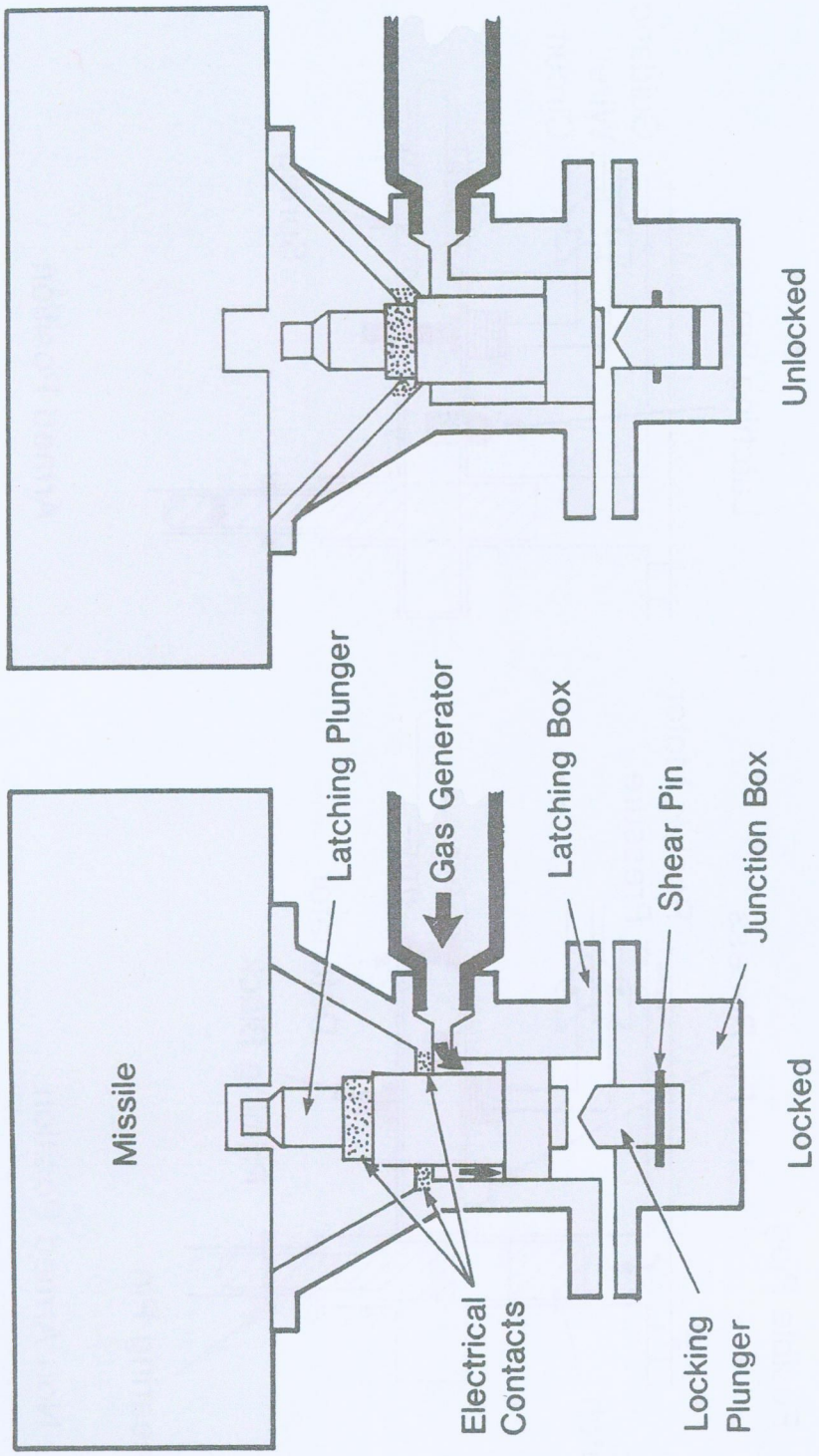

Fig 28. — Second Safety

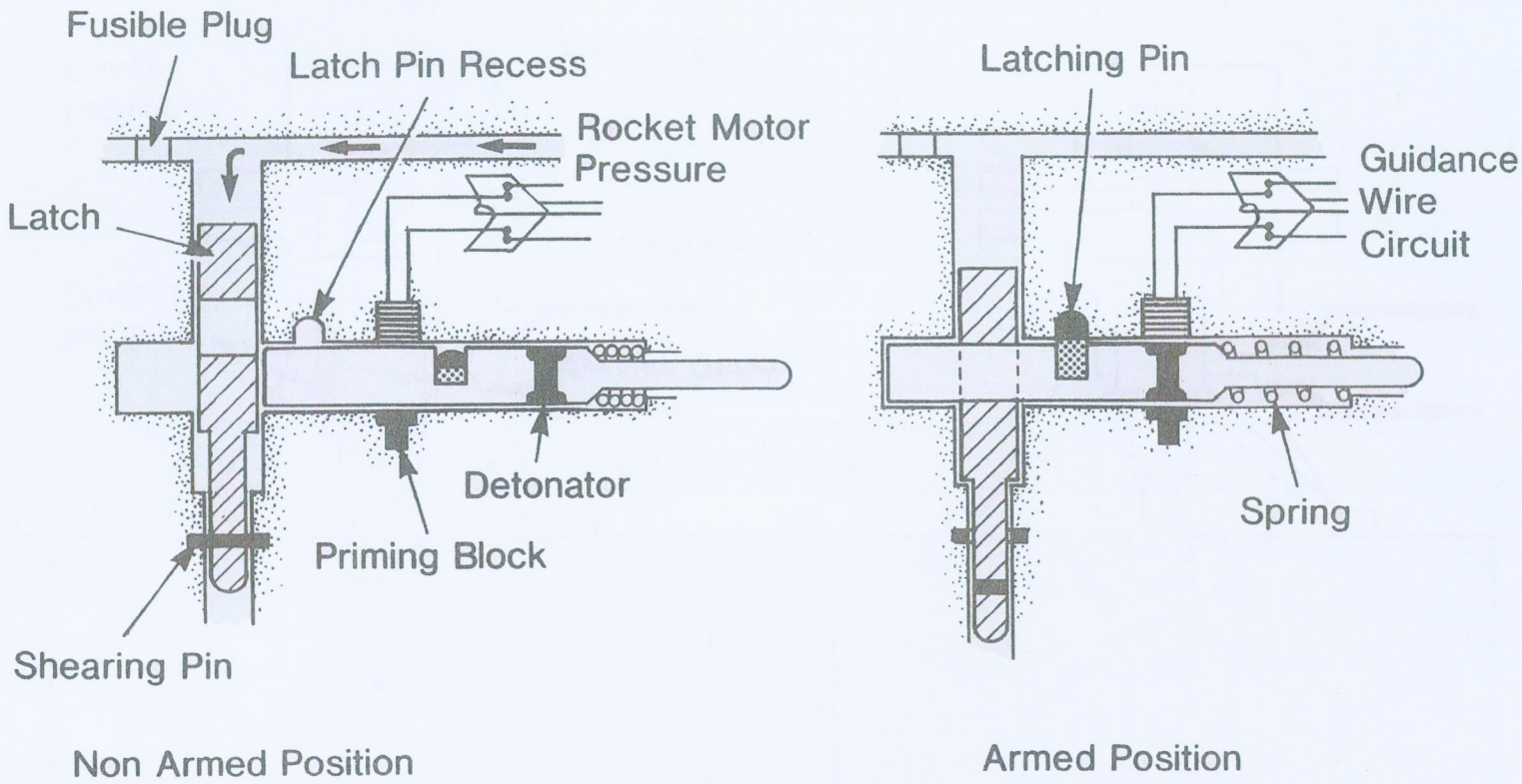

Fig 29. — Third Safety

RESTRICTED

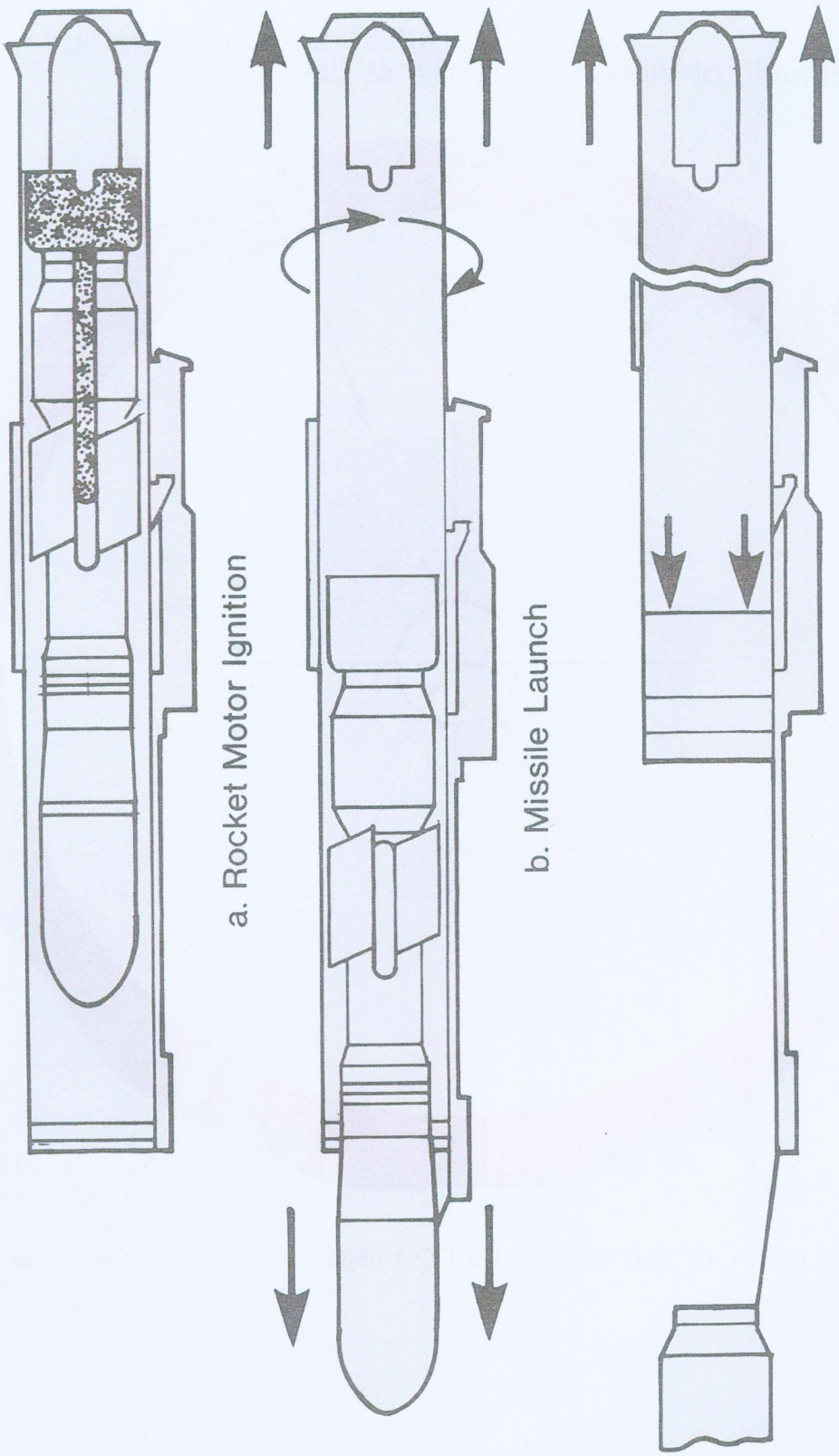

Fig 30. — Missile Launch Sequence

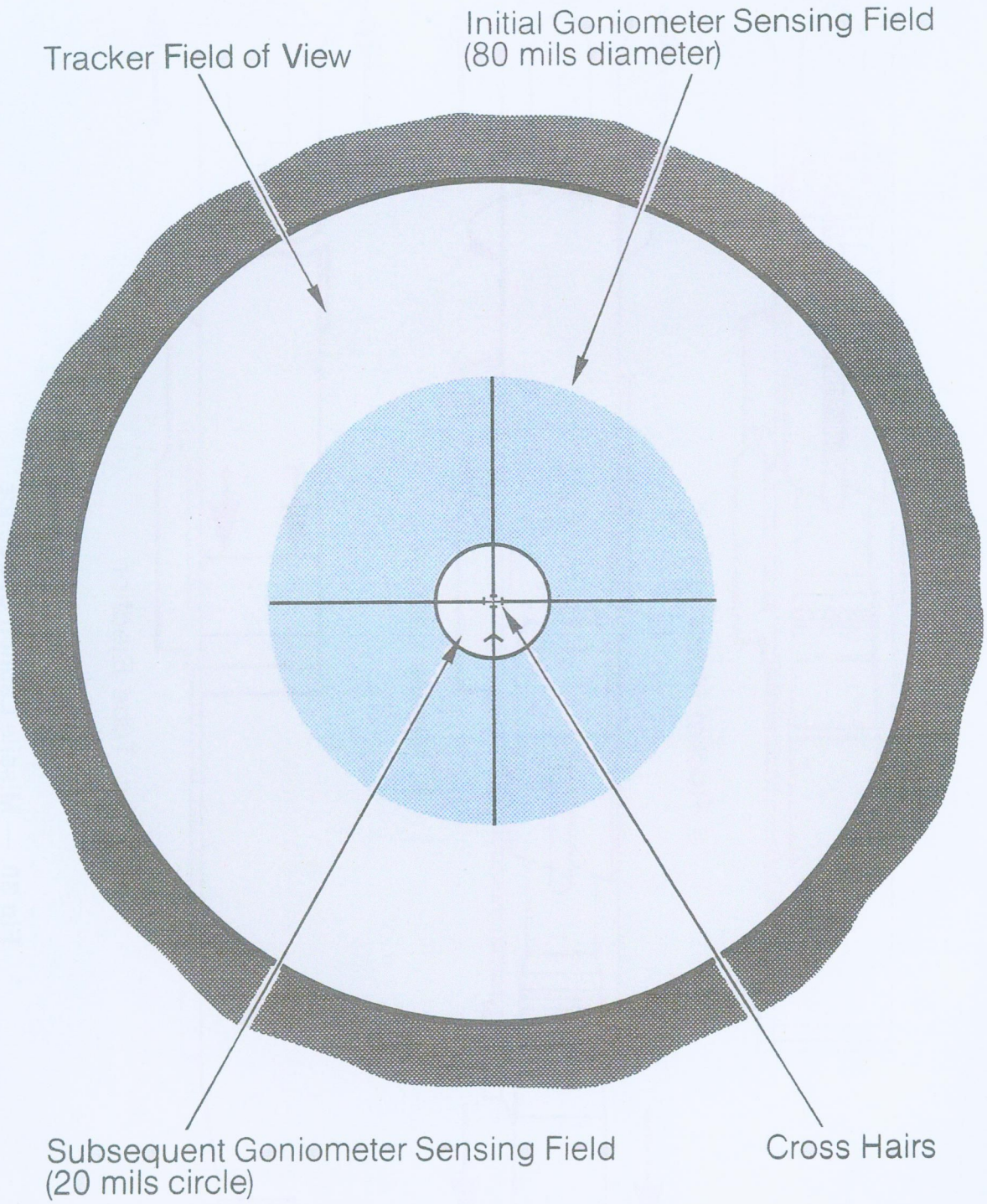

Fig 31. — Goniometer Sensing Fields

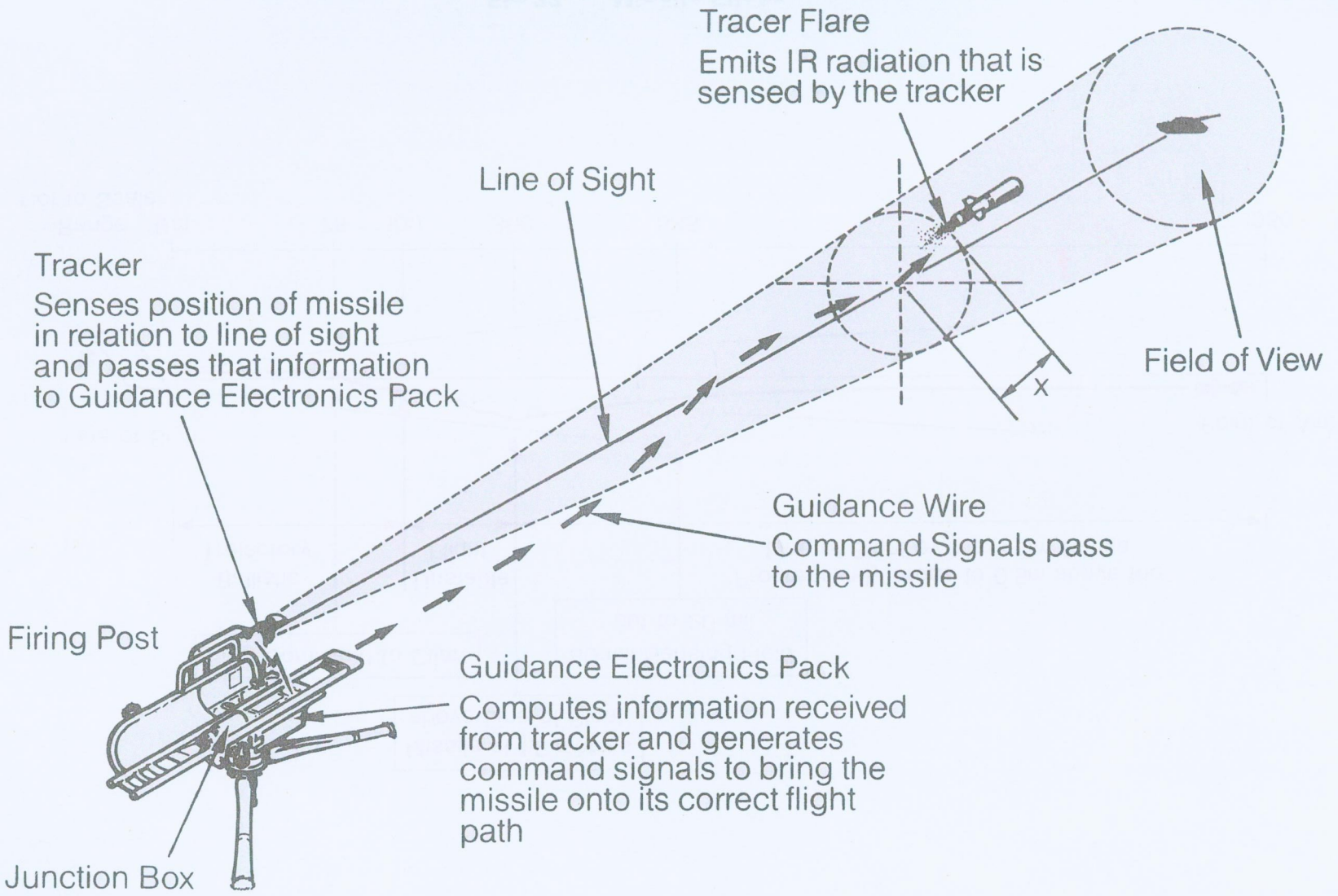

Fig 32. — Basic Guidance

RESTRICTED

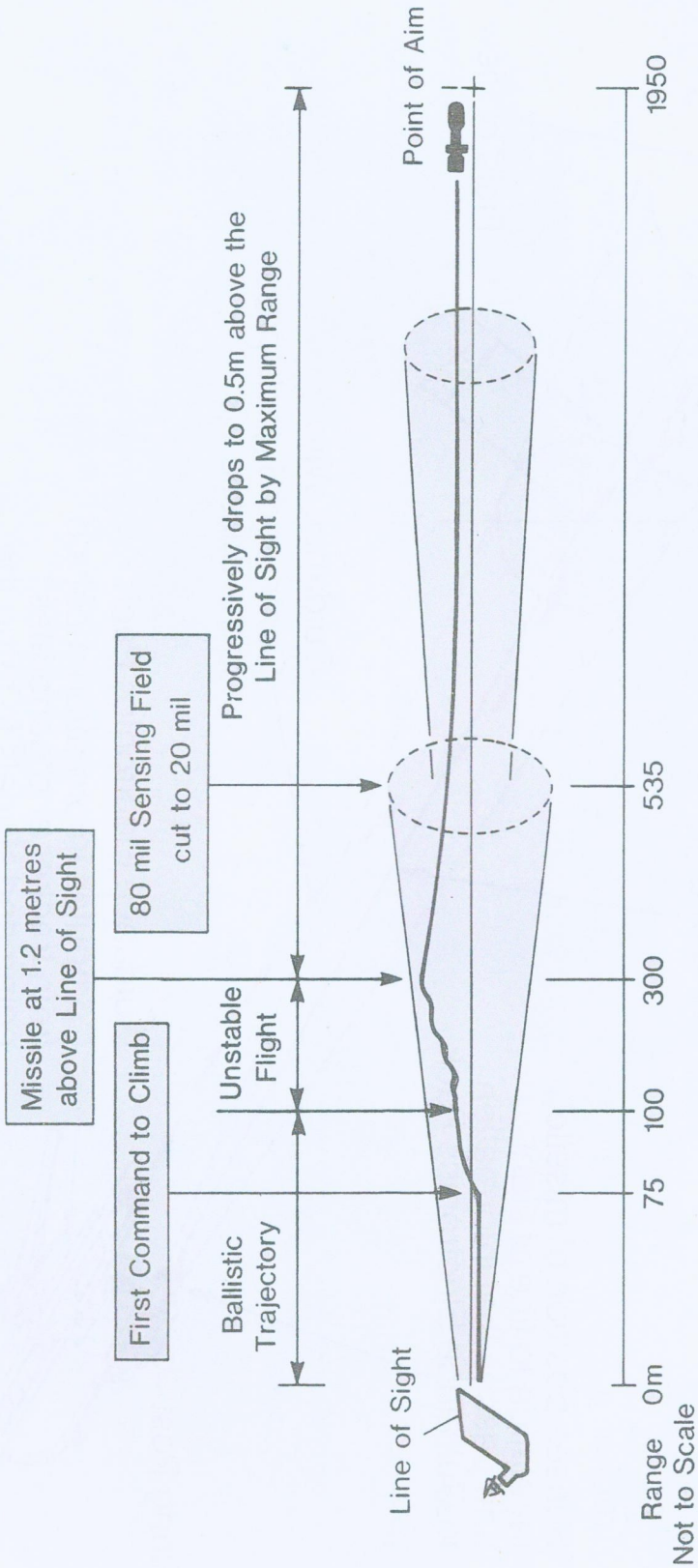

Fig 33. — Missile Flight

Chapter 2

WEAPON DRILLS

INTRODUCTORY NOTES

Aim

0201. The aim of weapon drill is to teach the soldier his duties in handling the equipment and firing the weapon as a member of a team, so that his actions become instinctive under battle conditions.

Drills

0202. The sequence of actions, carried out by the soldiers in the detachment, contained in the following lessons has been prepared for use with the 1 tonne vehicle fitted for MILAN. With slight modifications, the drills are suitable for use with other vehicles. Details of the MILAN fittings in other vehicles, and any variations from basic drills required for use with them, are contained in Annex C, Alternative Vehicle Drills.

0203. The instructor should insist on a high standard of weapon drills throughout and stress the need for sensible handling of the equipment at all times to avoid unnecessary damage.

0204. During basic training the equipment will be handled in the open, but it must be borne in mind by the soldier that at a later stage in training and on active service the weapon will almost invariably be sited in a battle trench.

0205. During instruction those members of the squad not actually working with the equipment should be used to criticize the actions of those who are.

0206. All commands in this chapter are shown in italics and inverted commas.

Tests

0207. Details of tests designed to assess the individual standard of training of each soldier in the platoon and of all soldiers in the various duties of a MILAN detachment are shown in Annex D, Training Tests (MILAN).

Safety Precautions

0208. The safety precautions for the ammunition taught in Lesson 5, and the safety precautions for MIRA bottles and batteries taught in Lesson 4, are to be carried out

at the beginning of each lesson either by or under the direct supervision of the instructor.

Stores

0209. If the stores listed at the beginning of each lesson are not available, then alternative aids should be used. In particular, if there are insufficient Drill ammunition tubes to equip the vehicle being used, then instructional ammunition tubes may be used. All drill and instructional ammunition tubes must be prepared and marked as detailed in Chapter 6, Section 8.

LESSON 7. — TARGET SELECTION AND AIMING

A. INSTRUCTOR'S NOTES

0210. ***Aim.*** *To teach:*

a. *How to determine whether the target is within range or not.*

b. *How to aim using the reticle.*

c. *Rules for target engagement.*

0211. ***Timings.*** *Two 40 minute periods.*

0212. ***Method.*** *A basic instructional indoor lesson.*

0213. ***Stores.***

One firing post
Diagram of reticle pattern (see Fig 34)
Diagram of average main battle tank (see Fig 35)
Ranging diagrams (see Figs 36, 37, 38 and 39)
Aim pictures (see Figs 40, 41 and 42)
Overhead projector and screen
Vufoils to illustrate the lesson
Representative tank targets
Hand held aiming aids (1 per student)

0214. ***Preparation.*** *Firing post set up. Vufoils and aids arranged in the order required.*

B. CONDUCT OF THE LESSON

Preliminaries

0215. ***Revision.*** *Lesson 3 — General description of the firing post and MILAN fighting ranges.*

Introduction

0216. *Explain:* It is essential that the firer knows how to determine whether or not a target is within range. He must also understand the rules for selecting and engaging a target and must be able to aim correctly and maintain the aim throughout the flight of the missile.

The Reticle Pattern

0217. *Explain and demonstrate:* The reticle (*see* Fig 34) consists of:

a. A 20 mil circle, which indicates that part of the field of view in which the goniometer, located in the tracker, senses infra-red sources throughout the missiles flight.

b. Cross hairs which intersect the 20 mil circle.

c. Stadia lines which are used to determine whether the target is in range.

d. A pre-aiming mark to assist the firer in aiming to counteract the weight displacement on firing.

0218. *Confirm by questions.*

Range Determination

0219. ***Stadia Lines.*** *Explain and demonstrate with drops or vufoils:* Whether or not a target is in range can be determined by using the stadia lines. This is a more accurate method than estimation. The space between the stadia lines is based on the dimensions of an average main battle tank and the size it appears when viewed through the sight at a distance of 2000 metres. The dimensions of an average main battle tank are: height, 2.4 metres: length. 6 metres: width, 3 metres (*see* Fig 35).

0220. ***Targets Within Range.*** *Explain and demonstrate with drops or vufoils:* Quick and accurate determination of whether the target is within range is possible if the firer knows how a main battle tank at 2000 metres appears in relation to the stadia lines. An average sized main battle tank at 2000 metres appears as follows:

a. *Head On Target.* The target fills half of the space between the vertical stadia lines and completely fills the space between the horizontal stadia lines (*see* Fig 36).

b. *Direct Crossing Target.* The target completely fills the area within the stadia lines (*see* Fig 37).

c. *Diagonal Crossing Target.* The target completely fills the space between the horizontal stadia lines and at least half, but not necessarily all, of the space between the vertical stadia lines (*see* Fig 38).

0221. ***Small Targets.*** *Explain:* Depending on the priority of engagement given, MILAN could well be firing at targets smaller in size than the average main battle tank. If this is the case, it must be borne in mind by the operator when applying the stadia lines to determine whether the target is within range or not. The con-

struction of an accurate battle card (AF B 9922) and a high degree of AFV identification skill will assist the operator in this task.

0222. ***Targets Out of Range.*** *Explain and demonstrate with drops or vufoils:* If at any time the target is within the stadia lines the range may be in excess of 2000 metres and the target should not be engaged (*see* Fig 39). This is a general rule of thumb and the operator must use an accurate battle card (AFB 9922) to determine whether or not smaller targets are in range.

0223. *Confirm by practice using representative tank targets.*

Aiming

0224. ***Point of Aim*** (*see* Fig 40). *Explain and demonstrate:* The point of aim will vary depending on the range to the target and how much of it is visible to the firer. A correct point of aim will ensure a hit in a vulnerable place on the target. The points of aim are as follows:

a. For targets beyond 400 metres where the road wheels are clearly visible — **Central for line and at the top of the road wheels for elevation.**

b. For head on, hull down and withdrawing targets. For targets where road wheels are not clearly visible and for static targets below 400 metres — **Bottom centre of the visible mass.**

c. In an emergency, direct crossing targets between 20 and 400 metres can be engaged — **Bottom forward edge.**

0225. *Confirm by questions.*

0226. ***Pre-Aiming.*** *Explain:* Immediately on firing, because of the weight relief which occurs on the firing post, the line of sight dips. To make allowance for this and also to prevent the possibility of the missile grounding on launch, pre-aiming must always be carried out. To do this lay the pre-aiming mark onto the point of aim and track the target if necessary (*see* Fig 41).

0227. *Confirm by questions.*

0228. ***Re-Aiming.*** *Explain:* On launch of the missile, smoke is produced which could momentarily obscure the target. When the smoke clears, providing pre-aiming and, in the case of a moving target, tracking have been carried out correctly, the crosshairs should appear on or near the correct point of aim. If they do not, the aim should be corrected to achieve the correct aim picture (*see* Fig 42). This procedure known as re-aiming must be carried out with the minimum delay.

0229. *Confirm by questions and practice.*

0230. ***Aiming with MIRA.*** *Explain:* Aiming with MIRA is as already taught. There may be occasions when, due to range and thermal conditions, a complete picture of the target is not seen; perhaps only the target engine area is visible. In cases such as this the operator must judge where the correct point of aim on the target would be in relation to the part or parts of the target that are visible, and aim accordingly.

0231. *Confirm by questions and practice with aiming aids.*

0232. ***Corrected Aiming with MIRA.*** *Explain:* On certain occasions it may be necessary to correct the aim with MIRA. This procedure and the reason for it will be dealt with in Lesson 16.

Target Engagement

0233. ***Targets Moving Near Cover.*** *Explain:* Before a moving target is engaged, it must be determined whether there is a chance that the target could be obscured from view by reaching solid cover before missile impact. As a rule of thumb, when an inexperienced firer lays the cross hairs on the target and there is an obstacle or cover within 75 mils, he should not engage. However, variables such as target speed, range to the target, direction of movement and terrain must be taken into account when deciding whether to engage or not and the experienced operator will, particularly if he has been able to reconnoitre the area on which the target is moving, often be justified in engaging (*see* Fig 43). It is not possible to apply the 75 mil rule when using MIRA because the infra-red field of view is less than the 150 mils of MILAN. However, by using the extremities of the horizontal cross wires, it is possible to identify solid cover within an 80 mil area. Careful observation of the ground features within the designated killing area should therefore be carried out by day and plotted accordingly on the battle card (AFB 9922).

0234. *Confirm by questions.*

0235. ***Priority of Engagement.*** *Explain:*

a. Priority of engagement can change and depends on the following:

(1) The threat.

(2) The friendly forces concept of operations.

(3) Composition and availability of anti-armour weapons to the battle group.

b. The battle group commander will lay down the priority of engagement in his orders for fire control.

c. MILAN's capabilities make it an ideal weapon system to selectively destroy specific enemy AFVs such as command and control and air defence vehicles.

0236. *Confirm by questions.*

0237. ***Decoy Danger.*** *Explain:* Any strong infra-red source, e.g., a burning tank or building, sensed by the goniometer will result in incorrect commands being sent to the missile and cause it to leave its correct flight path. To minimize the decoy danger, rules should be applied as follows:

a. Targets are not to be engaged when there is a decoy source within the 20 mil circle or one that is likely to appear within the 20 mil circle during the tracking of the target.

b. Ideally, targets should not be engaged when there is a decoy source within the 80 mil sensing field. The nearer the decoy source is to the 20 mil circle the greater the chance of the missile being decoyed. However, on occasions, it maybe operationally necessary to attempt such an engagement.

c. To combat the problem, in the above circumstances (sub paragraph **b.**) an 'aim off' from the decoy source is necessary. The ends of the cross hairs are used for this purpose (*see* Fig 44). The end of the cross hair used will depend on the position of the decoy source in relation to the target. The top of the cross hair is never used as this could result in the missile grounding. With the correct 'aim off' selected (i.e., when the decoy source is no longer visible within the 80 mil sensing field) and pre-aiming carried out if practical, press the firing button. Once the missile is on its correct fight path (i.e., after approximately four seconds and 0.5 metres above the line of sight), gradually move the tracker cross hair to re-aim onto the correct point of aim on the target, ensuring that, at no time, does the missile leave the 20 mil circle, nor the decoy source reappear within the circle.

d. The above procedure is a practical proposition for targets at or beyond 1100 metres, because the time of flight is sufficient for this, but for targets below 1100 metres, re-aiming must be made more quickly (i.e., as soon as the missile enters the 20 mil circle). This greatly reduces the chance of obtaining a hit.

e. The same procedure can also be applied when using MIRA. However, because the field of view is smaller and of different shape, the extremities of the horizontal cross hairs only are visible. Therefore, the bottom of the vertical crosshair cannot be used.

f. It must also be borne in mind that when firing with MIRA the missile may not be visible to the firer. In such cases the No. 1 must ensure that four seconds elapse before re-aiming takes place. This will ensure that only the 20 mil sensing field is in operation.

g. These rules must be taken into account in all engagements where a battlefield fire exists which could cause the loss of a missile. The experienced operator will, if consideration is given to all factors, on occasions be justified in opening fire when a limited decoy danger exists.

0238. *Confirm by questions.*

Conclusion

0239. ***End of Lesson Drill.***

a. *Confirm the complete lesson.*

b. *Pack kit.*

c. *Summary. To include the following:*

(1) *The ability to determine whether a target is within range*

(2) *The importance of correct pre-aiming, re-aiming and the procedure for aiming with MIRA.*

(3) *The normal priority of engagement.*

(4) *The 75 mil rule.*

(5) *The drill for combating decoy danger.*

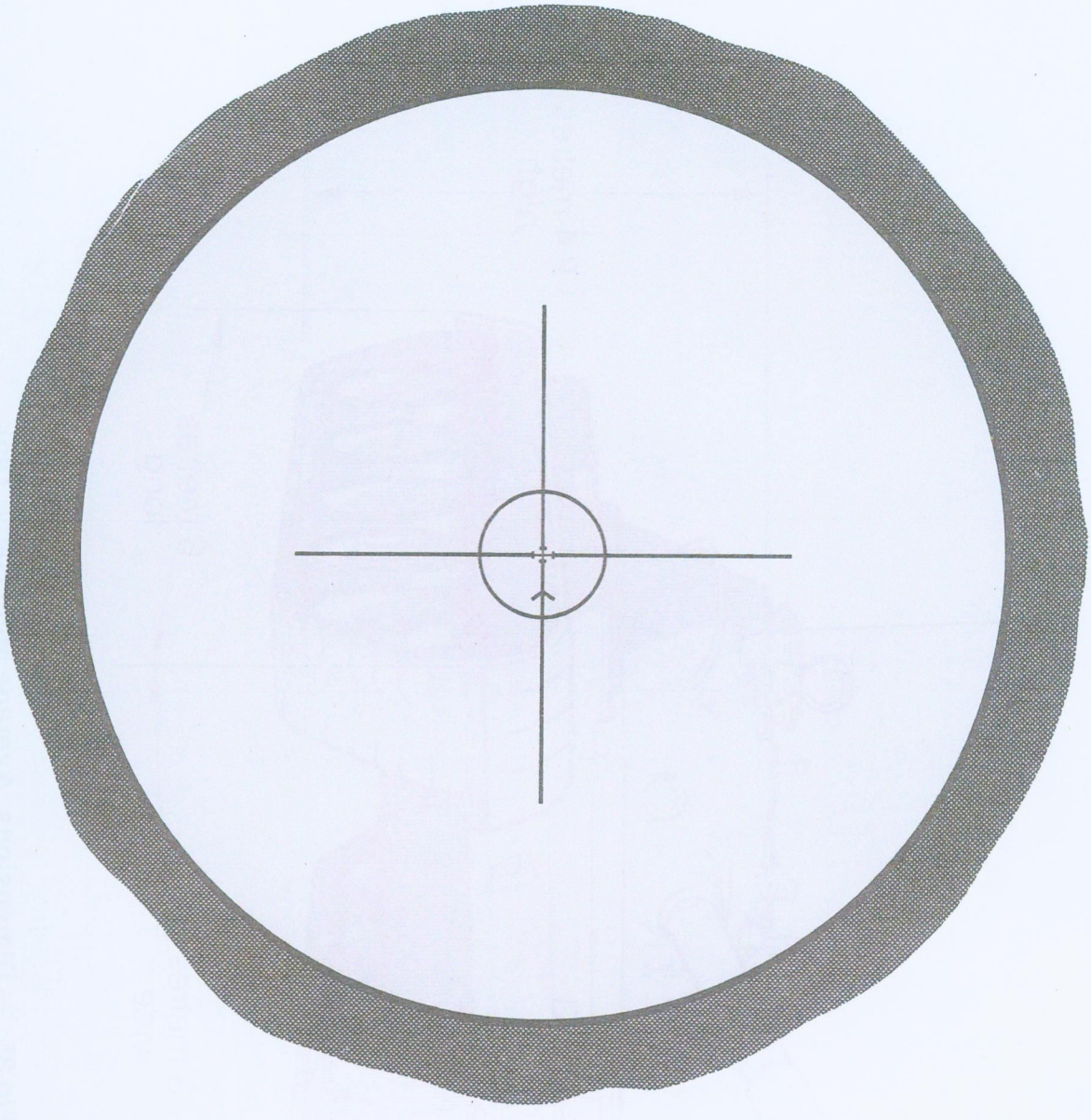

Fig 34. — The Reticle

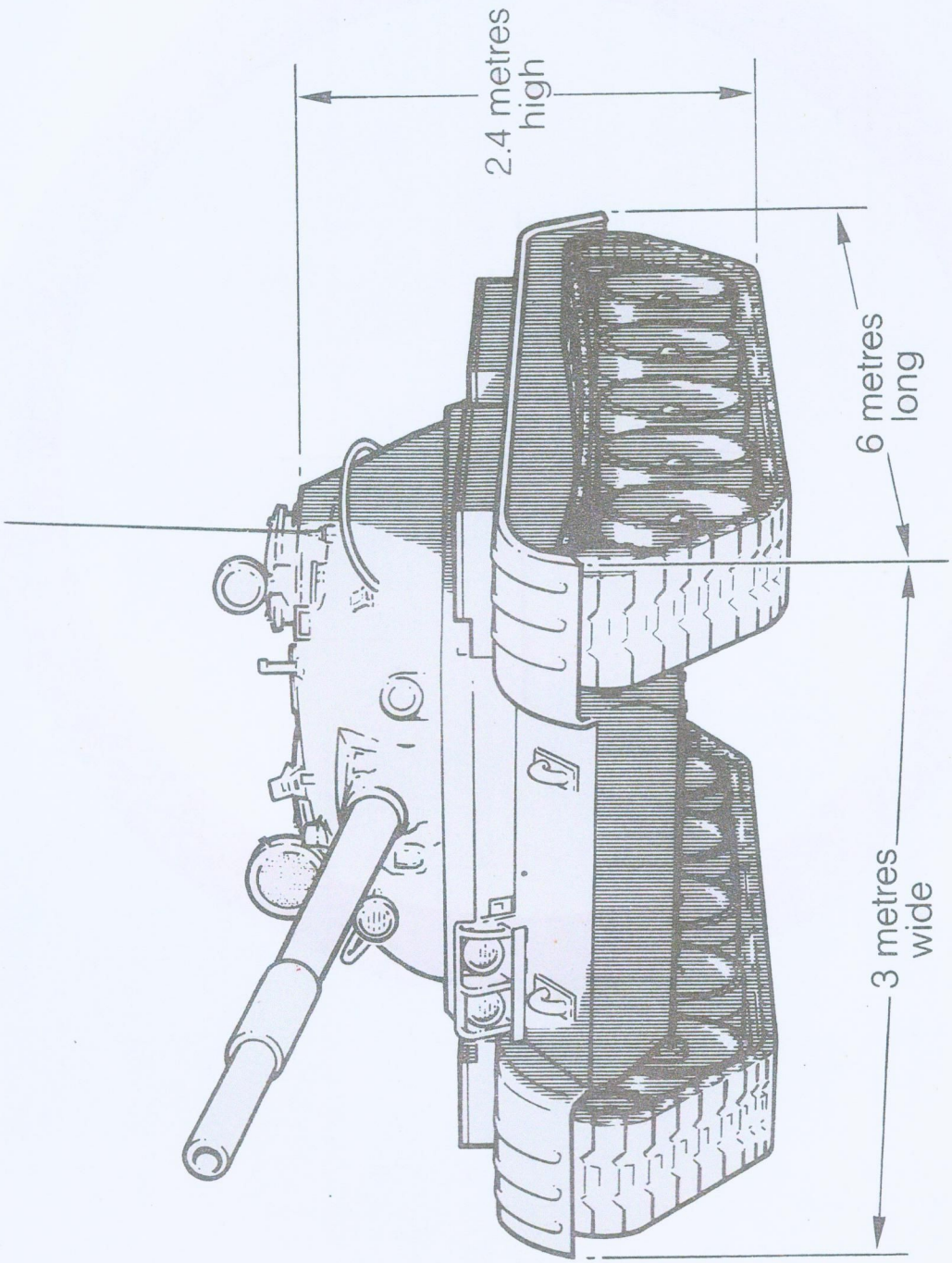

Fig 35. — Dimensions, Average Main Battle Tank

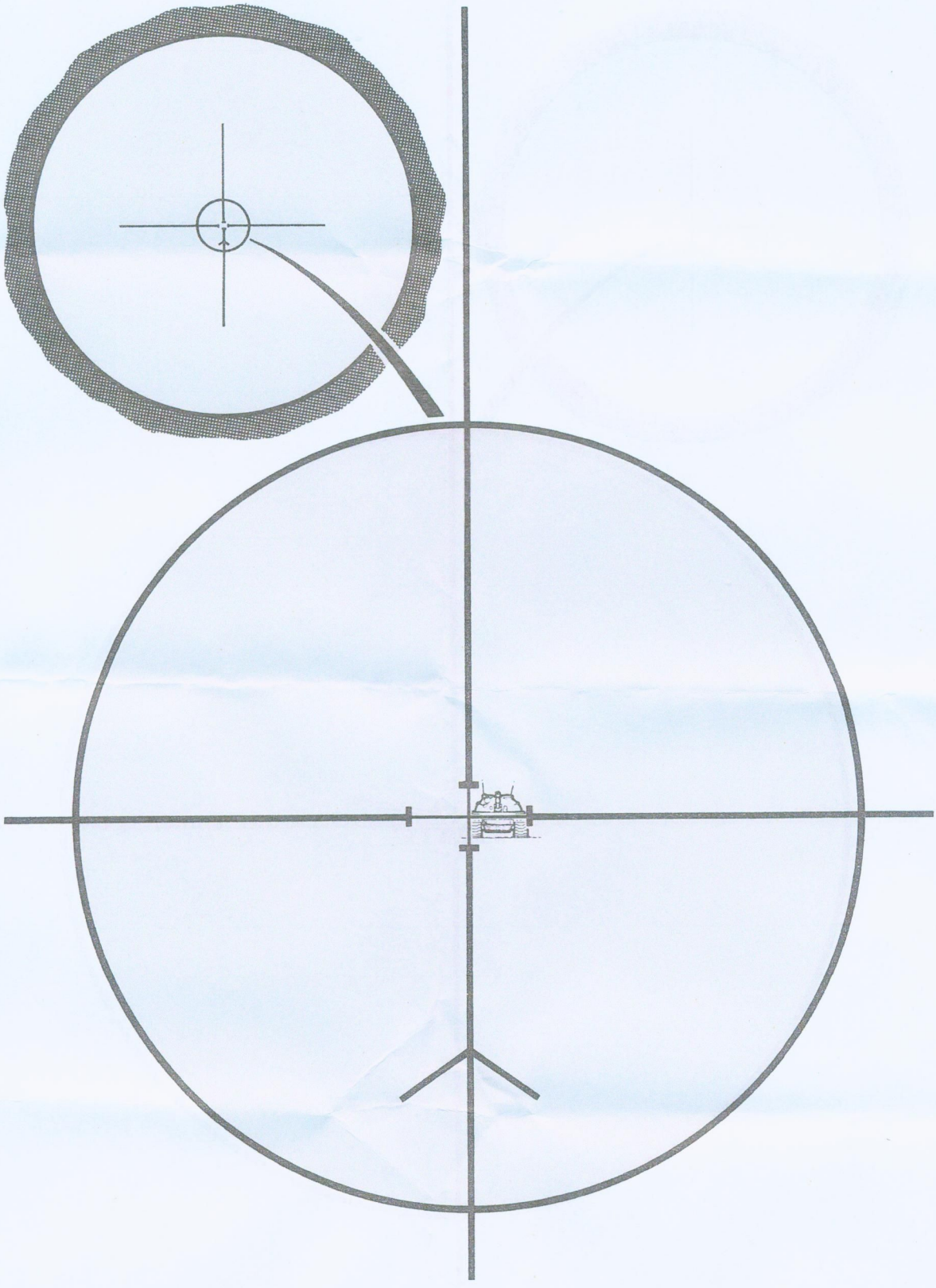

Fig 36. — Head On Target, 2000 metres

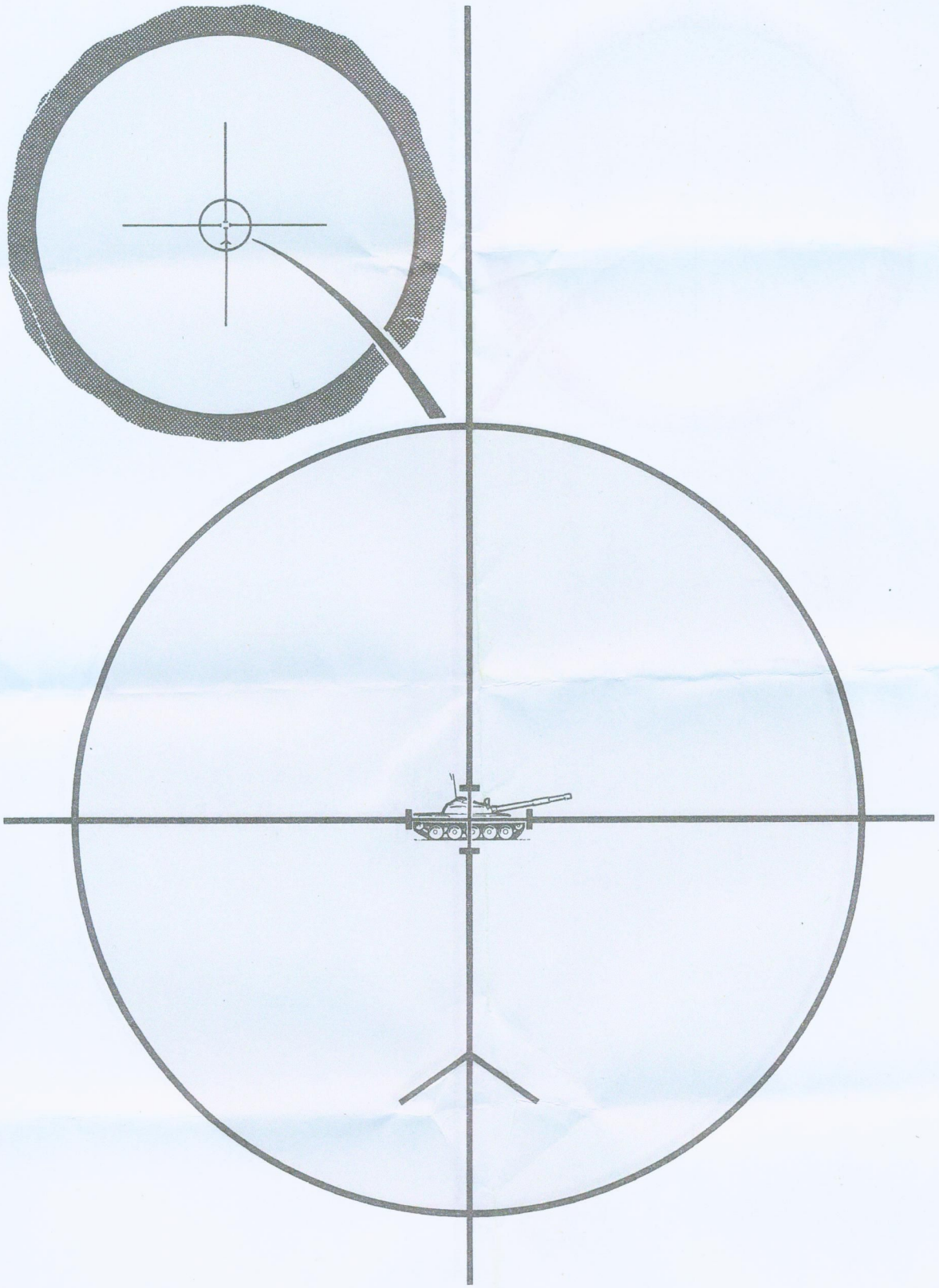

Fig 37. — Direct Crossing Target, 2000 metres

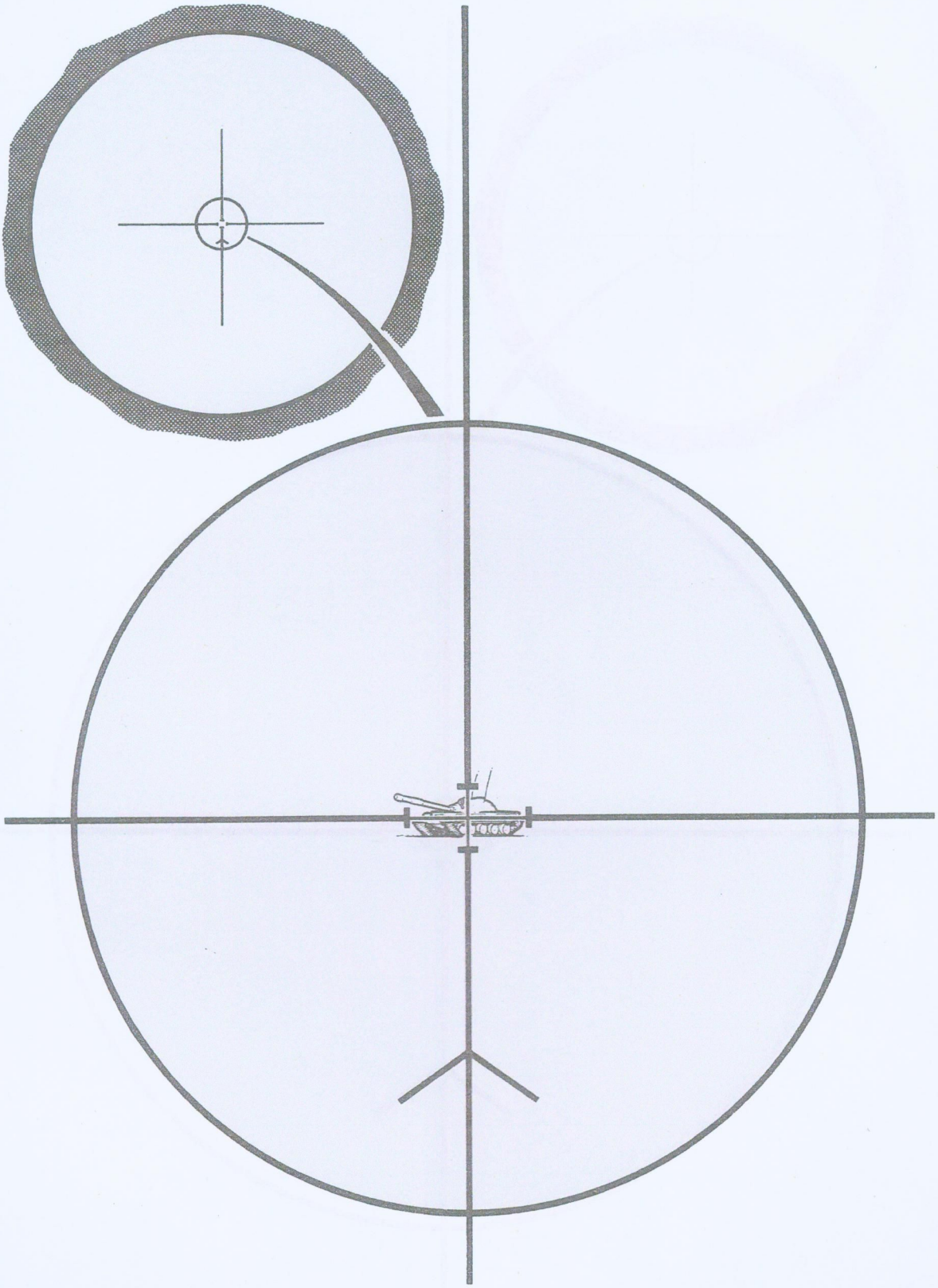

Fig 38. — Diagonal Crossing Target, 2000 metres

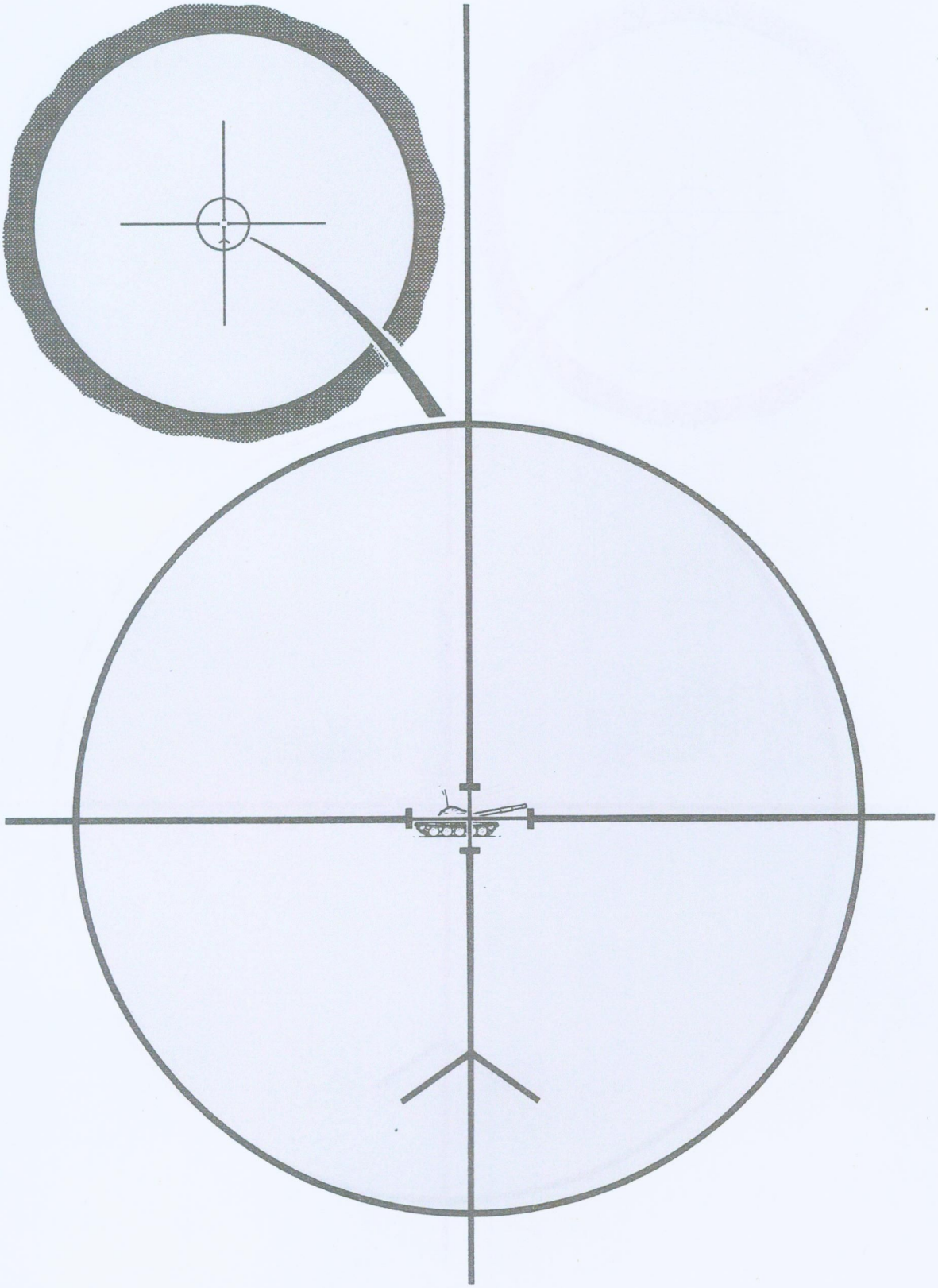

Fig 39. — Target Out of Range

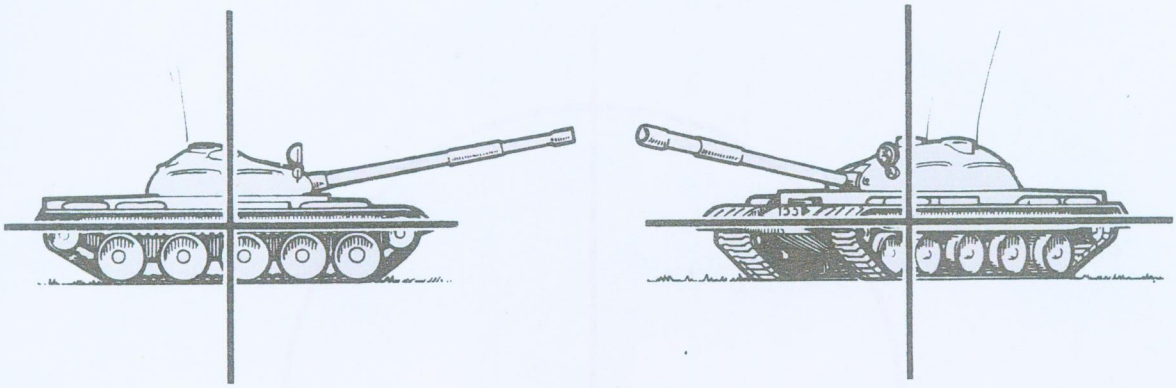

a – Central for line and at top of road wheels for elevation

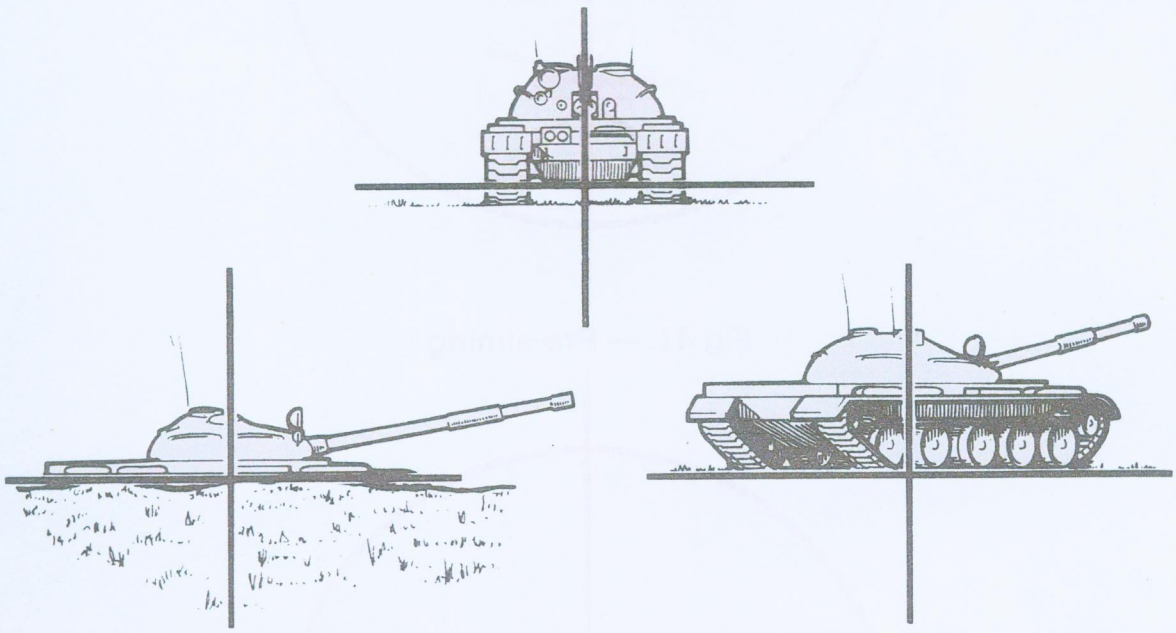

b – Bottom centre of the visible mass

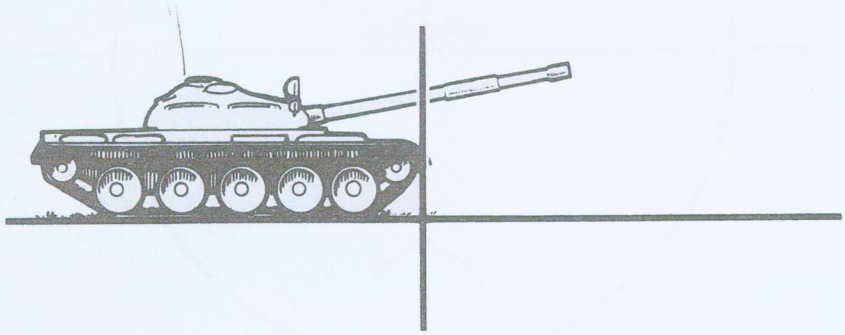

c – Bottom forward edge

Fig 40. — Point of Aim

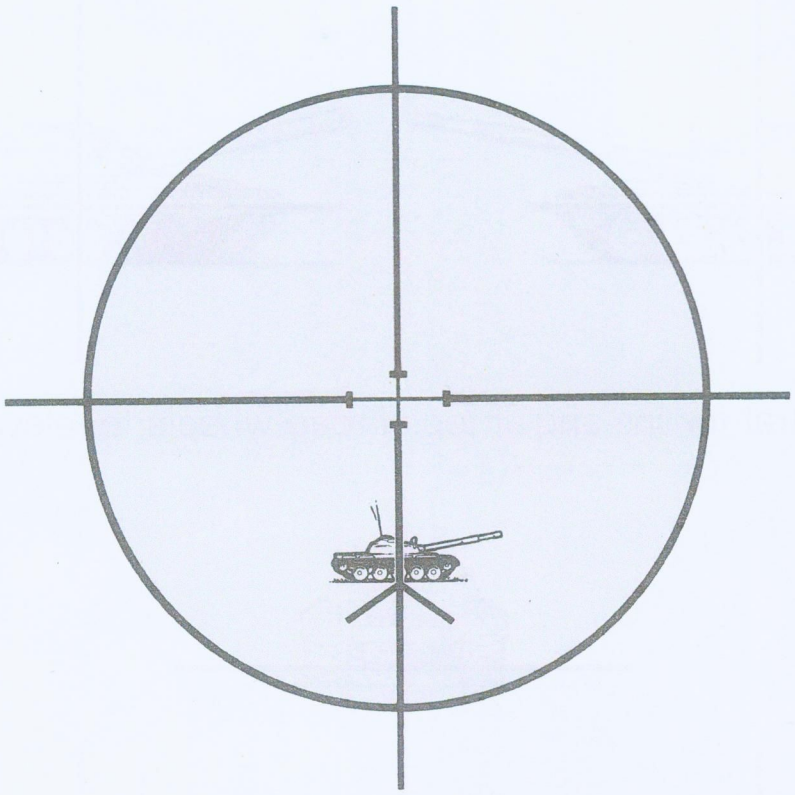

Fig 41. — Pre-aiming

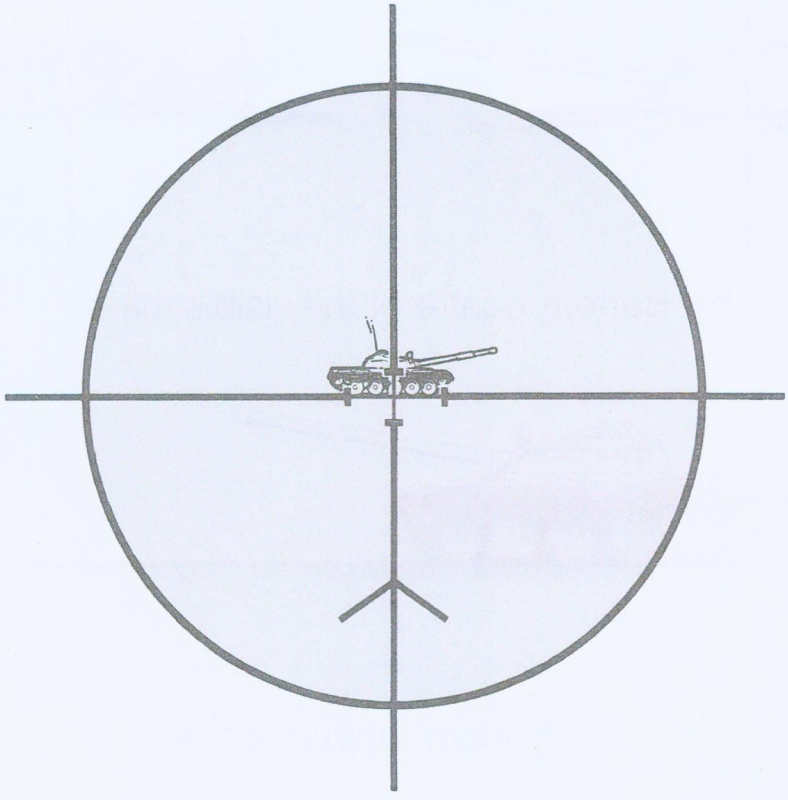

Fig 42. — Re-aiming

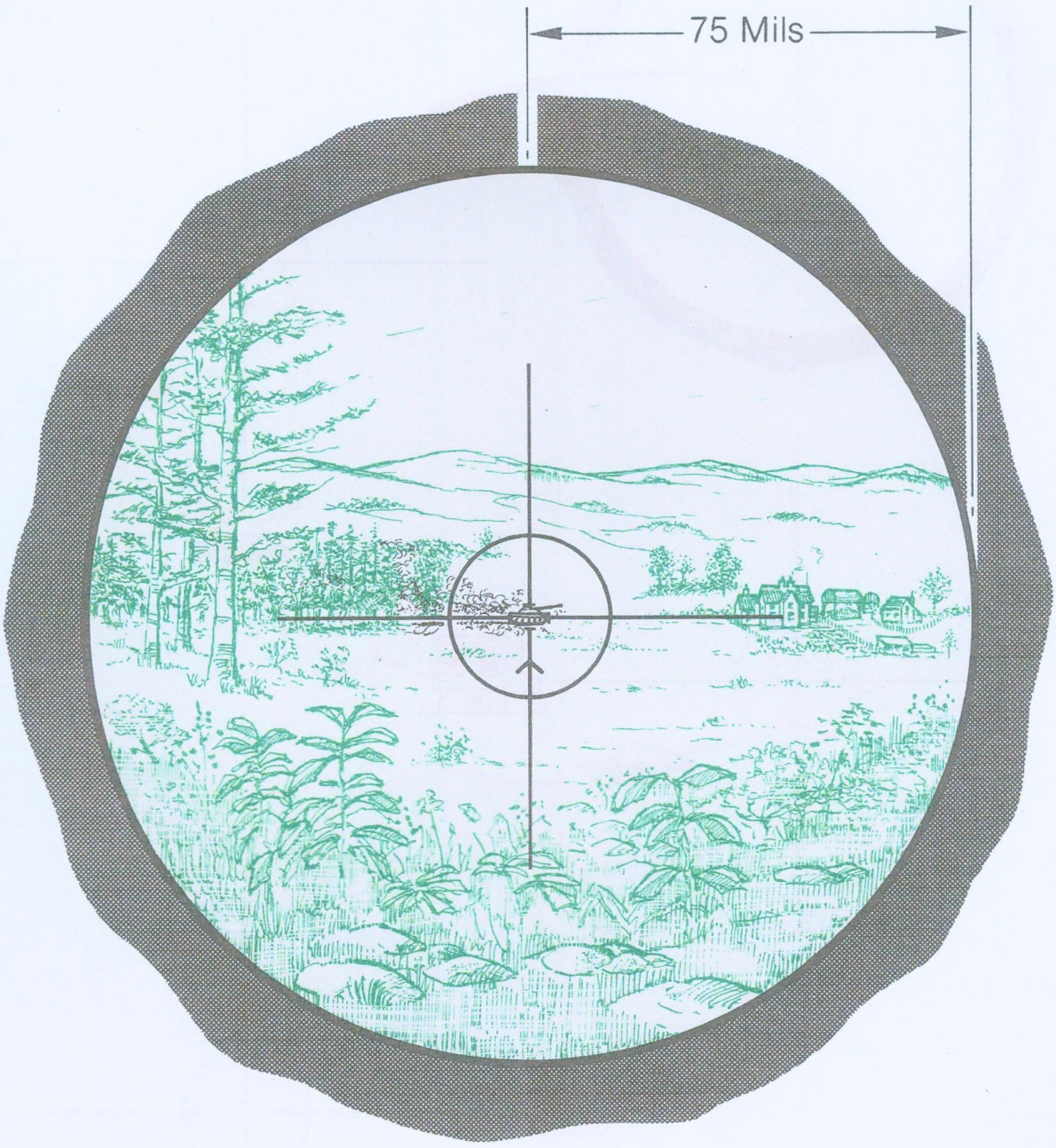

Fig 43. — The 75 Mil Rule

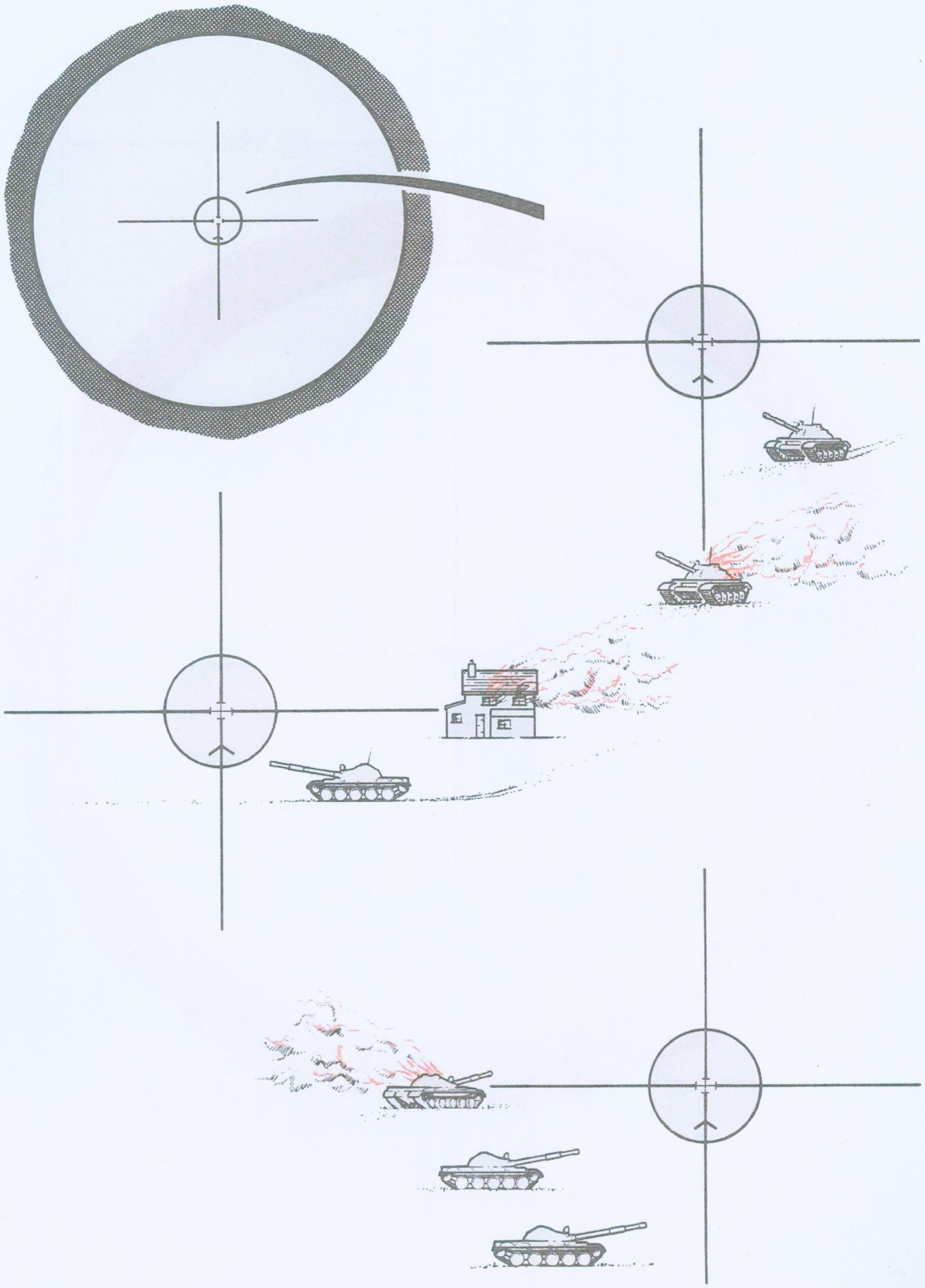

Fig 44. — 'Aim Off' to Combat Decoy Danger

LESSON 8. — MIRA FITTING AND OPERATION

A. INSTRUCTOR'S NOTES

0240. ***Aim.*** *To teach:*

a. *How to fit MIRA to the firing post.*

b. *Operation of MIRA and use of controls.*

c. *Action on warning indicators.*

d. *Application of external power supply.*

0241. ***Timings.*** *Two 40 minute periods.*

0242. ***Method.*** *A basic instructional indoor lesson (see Miscellaneous below).*

0243. ***Stores.***

One firing post complete with batteries
Mounting bracket
MIRA in its carrying bag
Bottles
Lithium batteries
DC to DC converter complete
Two charged 12 volt batteries/One charged Clansman 351 battery
One shorting strip

0244. ***Preparation.*** *Ensure that all bottles and batteries have been inspected for serviceability. Under no circumstances must any defective material be used. Ensure that MIRA is correctly packed in its carrying bag with its accessories. Firing post to hand but concealed. Seating arranged for the squad.*

0245. ***Miscellaneous.*** *A reasonable field of view is desirable. Ideally prominent objects such as buildings, vehicles and trees should be within the field of view. It is important that the field of view is observed through an open window; EMR will not pass through glass. If a room with an opening window is not obtainable conduct the lesson outdoors.*

B. CONDUCT OF THE LESSON

Preliminaries

0246. ***Safety Precautions.*** *Detail members of the squad to carry out the inspection of bottles and batteries under supervision.*

0247. ***Revision.*** *Revise the main components of the MIRA and accessories and their functions.*

Introduction

0248. *Explain:* As the MIRA is an integral part of the MILAN weapon system it is important that all members of the platoon are able to set up the equipment and operate it efficiently. Only a thorough knowledge of the procedures involved by all members of the platoon will enhance the effectiveness of anti-armour operations in times of war.

Fitting MIRA to the Firing Post

0249. ***Preparation of the Firing Post.*** *Explain:* Before MIRA is fitted ensure that the lens protective cover is removed and three, charged reticle illumination batteries are fitted.

0250. ***Attaching the Mounting Bracket*** (*see* Fig 45). *Explain and demonstrate:* Attach the lens cover to the circular housing on the bracket, fully unscrew the tightening knob on the bracket securing device. Position the bracket over the firing post so that the forward leg stud engages in the recess in the support assembly immediately above the alternate sling swivel and the rear leg stud engages in the recess in the upper rear part of the guidance electronics pack. Turn the hook of the securing device so that it engages with the underside of the upper tubular bar of the support assembly. Hold the hook in position and turn the tightening knob clockwise until hand tight. Check that the bracket is attached correctly. To remove the bracket undo the tightening knob fully, turn the hook clear of the support assembly and then lift the bracket clear of the firing post. Remove the lens cover from the bracket and replace it onto the tracker.

0251. *Confirm by questions and practice ending with the bracket fitted.*

0252. ***Attaching MIRA to the Mounting Bracket*** (*see* Fig 46). *Explain and demonstrate:* Attach MIRA to the mounting bracket in the following sequence:

a. Remove MIRA from its carrying bag.

b. Ensure that the protective bung is withdrawn from the rubber bellows.

c. Place the MIRA on top of the mounting bracket, by holding the carrying handle, ensuring that the guide ridge on the underside of the MIRA is seated in the guide recess on the top of the bracket and the locking recesses on MIRA are forward of the ball lugs on the mounting bracket.

d. Steady the firing post with one hand and pull MIRA sharply to the rear. On correct locking a click will be heard. This is the locking spigot on the bracket engaging in the machined tunnel at the rear of MIRA.

e. Check that correct locking has been achieved by pushing MIRA forward using the carrying handle.

f. Engage the locking mechanism.

0253. ***Removing MIRA from the Mounting Bracket.*** *Explain and demonstrate:* Remove MIRA from the mounting bracket in the following sequence:

a. Ensure that both front covers are closed.

b. Grasp the carry handle.

c. Release the locking mechanism.

d. Raise the locking catch on the mounting bracket.

e. Push forward on the carrying handle until clear of the bracket.

f. Replace the bung in the bellows.

0254. *Confirm by practice, end with MIRA fitted to the mounting bracket.*

0255. ***Fitting the Air Bottle.*** *Explain and demonstrate:* To fit the bottle:

a. Remove the protective plug from the bottle housing.

b. Remove a bottle from the tactical container.

c. Inspect the bottle for defects (as taught in Lesson 4).

d. Remove the plastic protective cap from the bottle and insert the bottle into the housing by placing it on the seatings and pushing forward. (Hold the carrying handle while inserting the bottle.)

e. On locking an audible click will be heard. This occurs when the locking bars in the bottle housing engage in the bottle neck.

f. Ensure that the bottle is fitted correctly by gently pulling backwards.

g. Stretch and secure the rubber strap.

0256. ***Removing the Air Bottle.*** *Explain and demonstrate:* To remove the bottle, carry out the following drill:

a. Release the securing strap.

b. Turn the master switch to the 'Bottle Release' position and hold.

c. Withdraw the bottle and release the master switch.

d. Replace the protective cap on the bottle immediately.

e. Stow the bottle in the tactical container.

f. If a replacement bottle is not to be fitted replace the protective plug in the bottle housing immediately. If either bottle protective caps or the protective plug are not replaced immediately a risk of internal contamination is created by dust or dirt being able to settle on the vent of the bottle or the inside of the bottle housing.

0257. *Confirm by practice, end with the bottle fitted.*

0258. ***Fitting the Battery.*** *Explain and demonstrate:* Before the battery is fitted inspect it for defects as taught in Lesson 4. To fit the battery carry out the following drill:

a. Ensure that the female terminals on the battery are in line with the male terminals in the battery housing and push fully forward. Hold the carrying handle while inserting the battery.

b. On locking an audible click will be heard. This occurs when the spring clip in the battery housing engages in the battery recess.

c. Ensure that the battery is fitted correctly by gently pulling to the rear.

d. To remove the battery pull rearwards. (Hold the carrying handle while removing the battery.)

0259. *Confirm by practice, end with battery fitted.*

0260. ***Opening the Covers.*** *Explain and demonstrate:* It is important that the front covers are opened and closed in the correct sequence. Failure to do this will result in the cover locking mechanism becoming damaged. To open the covers proceed as taught in Lesson 4 paragraph 01100. The daylight filter must now be placed in the desired position. If a thermal image is required it must be down, thus covering the visible light entry window. If no thermal image is required the filter must be in the raised position. If the filter is raised the operator will see the normal field of view as seen in the day sight, but with a distinct blue tint similar to viewing through polarized sun glasses. This facility can have advantages in conditions of very bright light. To close the covers proceed as taught in Lesson 4.

0261. *Confirm by questions and practice, ending with the covers open and the day-light filter in the raised position.*

Operating MIRA

0262. *This phase of the lesson requires that the field of view is observed through an open window.*

0263. ***Conditioning.*** *Explain and demonstrate:* To ensure that a thermal image is obtained with minimum delay and requiring only minor adjustment carry out the following drill:

a. Ensure that both protective covers are open and the daylight filter is raised.

b. Focus the reticle in the tracker and lower the daylight filter.

c. Ensure that the bottle and battery are fitted correctly.

d. Pre-set the controls as follows:

(1) Brightness — quarter of a turn anti-clockwise from the fully clockwise position.

(2) Contrast — one click anti-clockwise from the fully clockwise position.

(3) Focus — two turns anti-clockwise from the fully clockwise position.

e. MIRA is now fully conditioned for switching on.

0264. *Confirm by questions.*

0265. ***Switching On.*** *Explain and demonstrate:* Switch on by turning the master switch clockwise to the 'On' position. On operating the master switch the scanner motor will be heard to start up thus rotating the scanner. At the same time any excess pressure on the inside of MIRA will be vented out through the pressure release valve, this action only lasts a few seconds. After approximately 30 seconds a thermal image will be seen on observing through the eyepiece of the tracker. During the 30 seconds which is required to cool down the detectors a circular yellow flashing light will be seen above the right side of the infra-red picture. This is the air warning indicator. It flashes when the detectors are too warm, i.e., on initial switching on or when there is insufficient pressure in the bottle to cool the detectors. After the 30 second cool down period the indicator light will go out provided there is sufficient pressure in the bottle.

0266. *Confirm by questions.*

0267. ***Use of Controls.*** *Explain and demonstrate:* The ability to detect, recognize and identify targets is essentially dependent on skilful operation of the contrast and brightness controls. Both controls are complementary to each other and should always be used as such.

0268. ***Contrast.*** *Explain:* Operation of this control selects the temperature band out of which an infra-red picture is produced. With the control fully clockwise it is at its lowest temperature setting and as such everything in the field of view with an equal temperature or greater will show up on the screen. As the control is turned

anti-clockwise the minimum temperature level is increased and as such only the hotter objects are seen. The action of this control is vital to the recognition and identification of AFVs as vehicle hot spots such as motors, exhausts, gun barrels and heaters can be isolated by manipulation of the control.

0269. ***Brightness.*** *Explain:* Operation of this control selects the level of brightness within the temperature band selected by the contrast control. In operation it can appear to have the same function as the contrast control. Careful positioning of this control is necessary when the reticle is illuminated prior to firing.

0270. ***Focus.*** *Explain:* The focus control operates like any other focussing device. It must be turned in either direction until as sharp an image as possible is obtained. For lengthy observation of oncoming targets more frequent operation is necessary.

0271. *Confirm by questions and practice ending with a well balanced and focussed thermal image.*

0272. ***Application of the Thermal Image to the Reticle.*** *Explain and demonstrate:* Having obtained a thermal image of the field of view it is now necessary to position the field of view so that the reticle is in the centre of it. This operation is carried out by means of the elevation and azimuth adjusters on the mounting bracket. To elevate the infra-red field of view turn the elevation adjuster clockwise, turning the adjuster anti-clockwise will depress the infra-red field of view. To move the infra-red field of view to the right turn the azimuth to the left. Dependent on the level of thermal contrast available it may be necessary to illuminate the reticle. Whenever the reticle is illuminated care must be taken in positioning the brightness control particularly if an engagement is imminent. Failure to pay enough attention to this requirement could result in the reticle brightness overpowering the brightness of the target thus making it impossible to aim accurately at the target.

0273. *Confirm by questions and practice.*

0274. ***Action on Warning Indicators*** (*see* Fig 47). *Explain:* Two low supplies warning indicators are contained on the inside of the equipment, one for the battery and one for the air supply. The battery warning indicator, when seen, will appear to the top and left of the infra-red picture and the air warning indicator will appear to the top and right of the picture.

0275. ***Battery Warning Indicator.*** *Explain:* The battery warning indicator consists of a circular red light which will come on when there is insufficient power left in the battery for continued operation of the equipment. When the light comes on switch off the MIRA, change the battery and then switch on again. Only change the battery when this indicator is seen; this is to ensure maximum use of available battery life (i.e., up to five hours).

0276. ***Air Warning Indicator.*** *Explain:* The air warning indicator consists of a circular yellow light which will come on approximately ten minutes before the detec-

tors become too warm. After this time lag the warning indicator will start to flash off and on.When it starts flashing switch off the MIRA, change the bottle and then switch on again. If the bottle is not changed within a short period of the indicator flashing the infra-red picture will start to deteriorate, this is due to the detectors losing sensitivity by becoming too warm. If this situation is allowed to continue an automatic inbuilt mechanism will shut off the electrical power to MIRA. This is a safety device that is designed to protect the detectors from damage through overheating. Should the equipment switch off automatically, put the master switch to the 'Off' position, change the bottle and then switch on again. It is important to note that the safety device does not shut off the flow of air from the air bottle, therefore failure to switch off and change the air bottle will result in the internal pressure dropping below 100 pounds per square inch and hence the bottle being rejected for recharging.

0277. *Confirm by questions.*

0278. ***Application of External Power Supply.*** *Explain:* To conserve the operational stocks of lithium batteries, an external power supply of 24 volts DC should be used whenever possible. The DC to DC converter will reduce this power to the 7 volts DC required by MIRA.

0279. ***Connection of the External Power Supply*** (*see* Fig 48). *Explain and demonstrate:* To connect the external power supply carry out the following drill:

a. Ensure that you have a charged Clansman 351 battery or alternatively, connect two 12 volt batteries by means of the shorting strip to produce 24 volts.

b. Ensure that MIRA is switched off.

c. Ensure that the 24 volts DC to DC converter is switched off.

d. Open covers and raise the daylight filter.

e. Focus the reticle pattern in the tracker and lower the daylight filter.

f. Fit the dummy battery into MIRA.

g. Fit the 7 volt cable from the dummy battery to the DC to DC converter.

h. Connect the 24 volt cable to the DC to DC converter.

i. Check all connections.

j. Connect the 24 volt cable to the batteries or battery if using a Clansman 351 battery.

0280. *Confirm by questions.*

0281. ***Switching on the External Supply.*** *Explain and demonstrate:* To switch on the electrical supply move the switch on the DC to DC converter to the 'On' position, the green light should glow indicating correct functioning. The MIRA can now be switched on as already taught.

0282. *Confirm by questions.*

0283. ***Switching Off the External Supply and Dismantling.*** *Explain and demonstrate:* To switch off carry out the following drill:

a. Switch off MIRA.

b. Switch off the DC to DC converter.

c. Disconnect the 24 volt cable from the batteries.

0284. *The remainder of the dismantling can be carried out in any sequence, including air bottles. Care must be taken when handling electrical connections to prevent damage. All protective caps and bungs must be replaced to prevent contamination and normal safety precautions must be observed.*

0285. *Confirm by questions and practice.*

Conclusion

0286. ***End of Lesson Drill.***

a. *Confirm the complete lesson.*

b. *Pack kit.*

c. *Summarize the main points.*

d. *Emphasize the need for correct handling drills particularly the procedures for opening and closing the front covers and action on the warning indicators.*

e. *Stress the importance of replacing bottle protective caps and the protective plug whenever a bottle is not fitted to MIRA.*

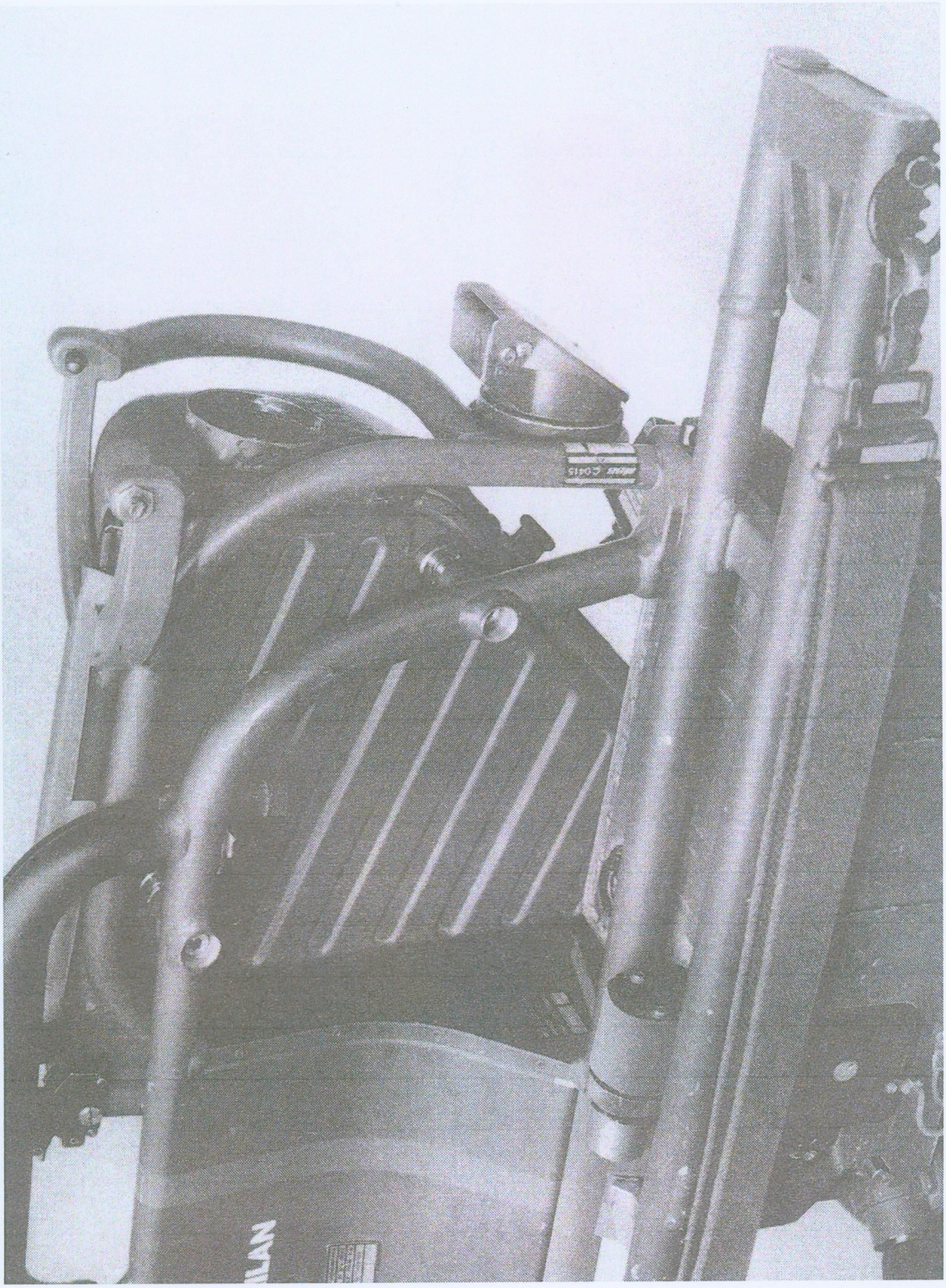

Fig 45. — Attaching the Mounting Bracket

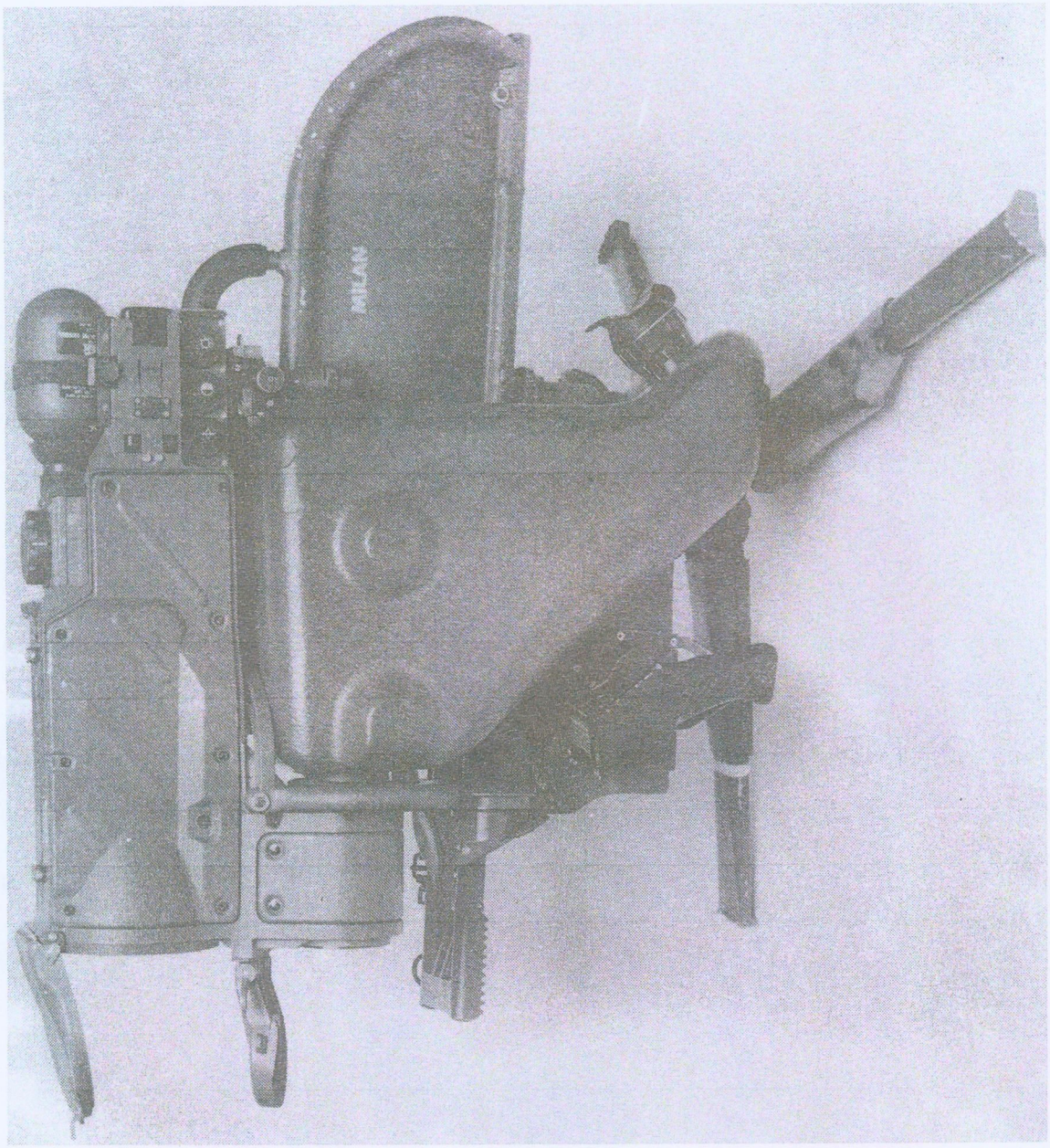

Fig 46. — Attaching MIRA to the Mounting Bracket

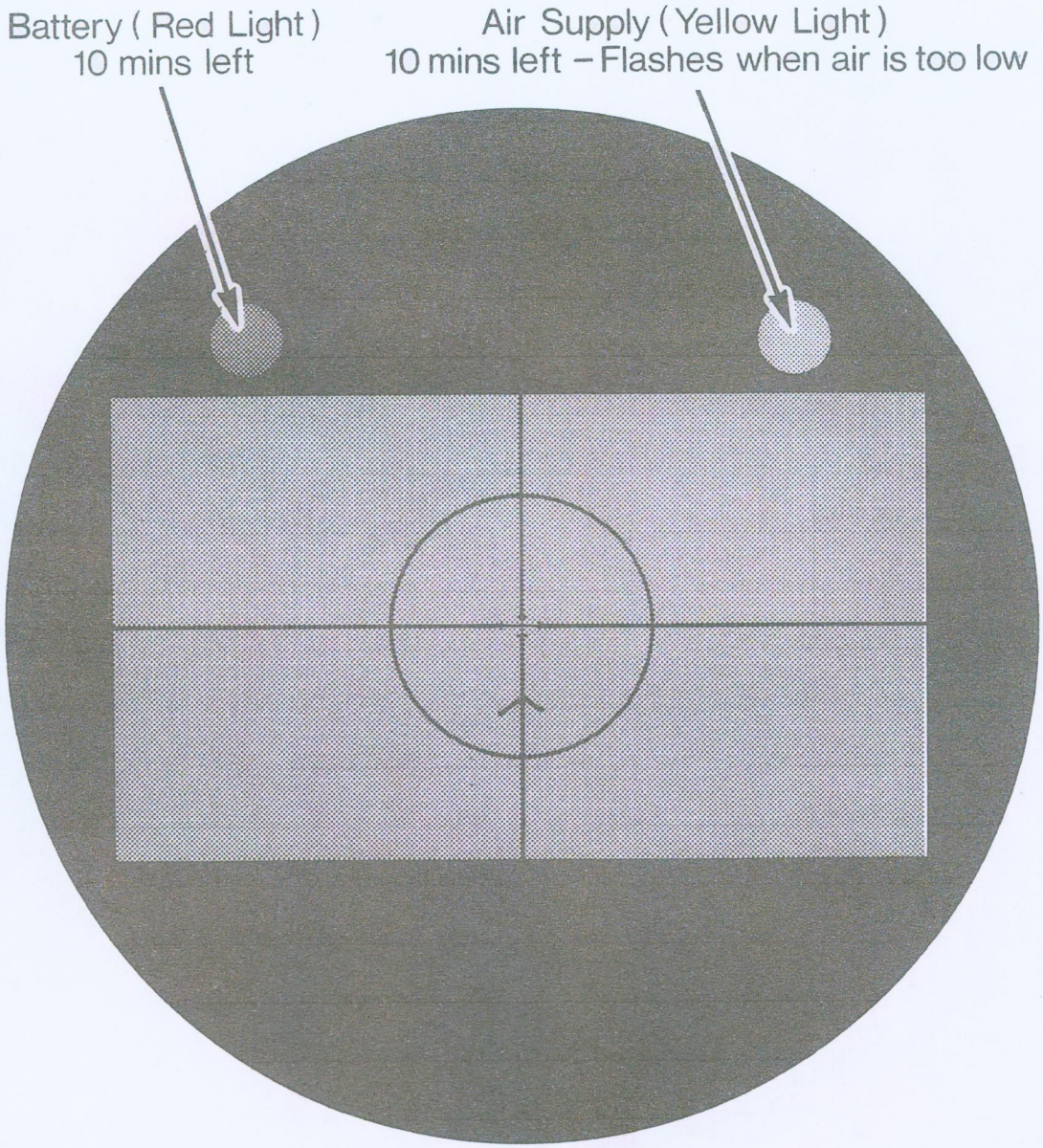

Fig 47. — Warning Indicators

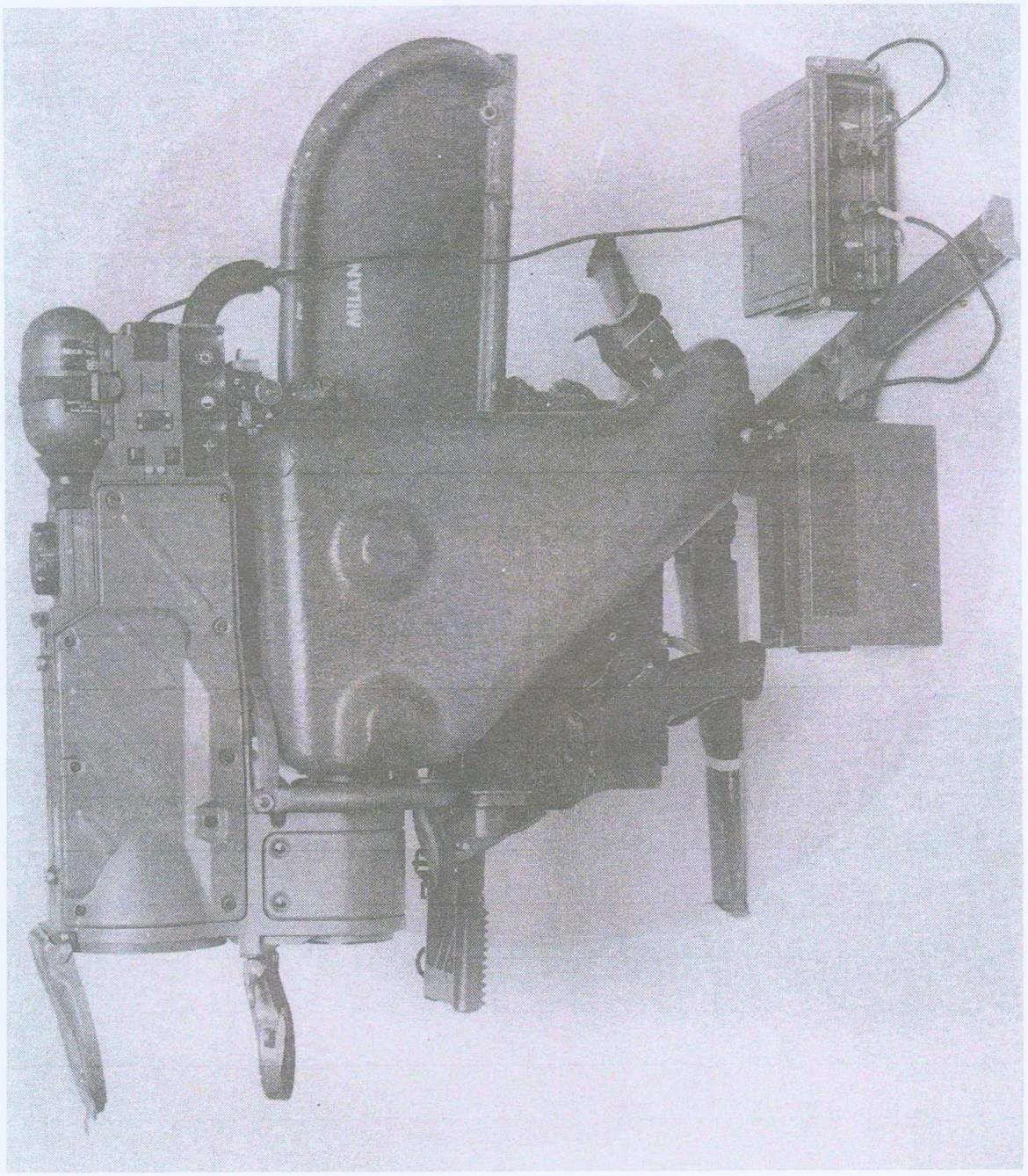

Fig 48. — External Power Supply Connected

LESSON 9. — INTRODUCTION TO DRILLS

A. INSTRUCTOR'S NOTES

0287. ***Aim.*** *To teach the basic duties and drill carried out by the detachment in subsequent drill lessons.*

0288. ***Timings.*** *Two 40 minute periods.*

0289. ***Method.*** *A basic instructional outdoor lesson.*

0290. ***Stores.***

Two firing posts
Eight drill ammunition tubes (plus shoulder straps)
Two MIRA (complete)
Two tactical containers/carrying bags
One 1 tonne vehicle and trailer (fitted for MILAN)
Two fire position markers
Two representative tank targets

0291. ***Preparation.*** *Ensure that all ammunition tubes are of a drill nature, inspect all air bottles and batteries and ensure that they are all serviceable. All stores and ammunition tubes are correctly stowed on the vehicle. Place out fire position markers, issue arc of fire and near and far limits, nominate direction of MTT.*

B. CONDUCT OF THE LESSON

Preliminaries

0292. ***Safety Precautions.*** *Explain that all ammunition tubes have been inspected and are all of a drill nature and all air bottles and batteries are in a serviceable condition.*

Introduction

0293. *Explain:* Each member of the detachment has certain duties to perform at various times. These duties will vary depending on the type of platoon, i.e., Mechanized, Type A or Type B. The drills and duties taught in this lesson are for a RM Cdo MILAN platoon and can be easily adapted to suit other organizations and vehicles (see Annex C). To avoid confusion and possible accidents, it is essential that each man knows what these duties are, the order in which they are carried out and who is responsible for them.

Duties

0294. ***The Detachment.*** *Explain:* The detachment consists of a Detachment Commander (DC), a No. 1, two No. 2s and a driver. Their duties are:

a. The No. 1 aims and fires the missile, carries the firing post and MIRA.

b. The No. 2s load and unload the ammunition, assist in the carriage of ammunition and target selection.

c. The Detachment Commander briefs and deploys the detachment. He is responsible for ammunition distribution, monitoring of MIRA bottles and batteries to maintain sufficient supplies, the co-ordination of white light (if required), fire control and the co-ordination of MIRA for surveillance within the detachment. He also acts as a No. 1 on the firing post which affords the best view of the killing area (whenever possible this should be the fire position nearest the main tank threat).

d. The driver, as detailed by the DC, assists in the removal and distribution of ammunition and stores from the vehicle. On orders from the DC, he positions and camouflages the vehicle. Whenever possible the driver returns to the DC's fire position to give assistance when and where required.

0295. ***Training.*** *Explain:* Each member of the detachment should be trained in all duties including the ability to drive so that in the event of casualties the missiles can still be fired, the vehicles driven and command and control maintained.

0296. *Confirm by questions.*

Vehicle Layout

0297. ***Stowage and Seating Plan 1 Tonne*** (*see* Fig 49). *Explain:* When the detachment are seated in the vehicle the DC and the DC's No. 2 occupy the left side and the driver, No. 1 and the other No. 2 occupy the right side (*see* Fig 52). Both firing posts are positioned upside down on brackets which are secured to the ammunition rack. In this position the tripod legs can be moved to the most convenient position. The DC's firing post (on the left) is held in place by two 'U' brackets and locked by a clamp lever. It is positioned correctly by a stop which is located at the outer front edge of the carrying handle. No. 1's firing post is held and locked in the same way as the DC's.The two MIRAs are stored in the rear of the vehicle (mountings are to be produced later) (*see* Fig 50).

0298. *Confirm by questions.*

Drills

0299. ***Stop.*** *Explain:* The instructor uses the command *"Stop"* to prevent accidents or to enable him to point out mistakes in drill. On this command all personnel stop work and remain still. This command should only be used when it is essential for one of the above reasons. On the command *"Go on"* (this command is only to be used by the instructor) work is resumed. It is permissible for a member of the squad under instruction to shout *"Stop"* but only if it is necessary to prevent injury or accident.

02100. ***Fall In.*** *Explain:* On the command *"Fall in"* the detachment double to their respective positions around the vehicle and trailer and stand to attention facing the front (*see* Fig 51).

02101. ***Mount.*** *Explain:* On the command *"Mount"* the detachment get into the vehicle, occupying their positions (as shown in Fig 52).

02102. ***Dismount.*** *Explain:* On the command *"Dismount"*, the detachment resume their 'Fall in' positions.

02103. ***Fall Out.*** *Explain:* On the command *"Fall out"*, the detachment turn right and double to rejoin the squad.

02104. *Confirm by practice. Explain the change round procedure, i.e., all move one position around the vehicle in a clockwise direction.*

Handling the Firing Post and MIRA

02105. ***Removing the Firing Posts.*** *Explain and demonstrate:* Firing posts must be removed in sequence, DCs first. In each case the procedure is the same. Unfasten the clamp lever, lift the firing post until the support assembly clears the 'U' bracket then remove the firing post.

02106. ***Replacing the Firing Posts.*** *Explain and demonstrate:* When replacing the firing posts, the No. 1s must be replaced first. In each case the procedure is the same. Position the firing post above the 'U' brackets ensuring that the carrying handle is correctly located in relation to the stops. Lower the firing post into the 'U' brackets. It may be necessary to slacken the firing post sling to ensure that it remains clear of the 'U' brackets. Once the firing post has been correctly positioned, secure by locking the clamp lever.

02107. *Confirm by practice, ending with both firing posts removed from the vehicle.*

02108. ***Carrying the Firing Post.*** *Explain and demonstrate:* No hard and fast rules are laid down for carrying the firing post. The method used will depend on the strength of the individual and the distance involved. Use of the shoulder strap will

prove less tiring and enable the soldier to handle his personal weapon (*see* Figs 53 and 54). For short journeys the firing post can be cradled in front of the body, with the tripod legs either open or folded (*see* Figs 55 and 56) or carried by the carrying handle with the legs folded and turned to the rear (*see* Fig 57). The firing post can be carried when necessary by strapping it to a GS carrier or the MILAN manpack *(see* Fig 58).

02109. *Confirm by practice.*

02110. ***Positioning the Firing Post.*** *Explain and demonstrate:* Open the tripod legs until the firing post is at the required height. Check that the elevation indicator is in the central position. Traverse the firing post until it is over the front leg, and adjust the tripod until the support assembly appears approximately level. Traverse the firing post through 1600 mils. It should remain level throughout the traverse. If not, adjust the tripod legs as necessary.

02111. *Confirm by questions and practice. End the practice with both firing posts positioned.*

02112. ***Removal of MIRA from the Vehicle.*** *Explain:* When deployment of MIRA is imminent both equipments are to be removed from their tactical containers in the vehicle and stowed in their carrying bags. On deployment it is the No. 1's task to carry and fit the MIRA.

02113. ***Replacing MIRA into the Vehicle.*** *Explain:* When the detachment is withdrawn from action the two MIRAs must be removed from their carrying bags and returned to their tactical containers before the vehicle moves off.

Handling the Ammunition

02114. ***Taking Out and Replacing the Ammunition.*** *Explain and demonstrate:* The vehicle and trailer carries a total of 24 ammunition tubes (12 per firing post). Eight ammunition tubes are carried in the trailer (inside logistic containers). One 'ready for use' ammunition tube is carried in the rear of the vehicle and the remaining 15 are inside the vehicle. Access to eight ammunition tubes is gained by unfastening the security catches and raising the ammunition securing panel until the stays at either end are locked in place. Another four ammunition tubes can be removed by lowering the vehicle's top side panel and to gain access to the remaining three ammunition tubes the top side panel must be raised and the bottom side panel lowered. The ammunition tubes are removed by carefully pulling on the shoulder straps. To replace them, insert the rear cover first (ensuring that the velcro strips are joined), push the ammunition tube to the rear, ensuring that the shoulder strap protrudes at the front. Before moving the vehicle the side and ammunition securing panels must be securely fastened.

02115. *Confirm by practice.*

02116. ***Positioning the Ammunition.*** *Explain:* The ammunition is placed to the right of the firing post. One ammunition tube is laid by the side of the firing post with the white arrow pointing forward. A further two ammunition tubes are placed at right angles to the firing post with the rear of the ammunition one metre away from it. The remaining ammunition is placed approximately three metres from the firing post with the rear of the ammunition pointing forward (*see* Fig 59).

02117. *Confirm by questions. Get the squad to remove the ammunition from the vehicle and position it at both firing posts.*

Drills in Action

02118. ***Action Position.*** *Explain and demonstrate:* On the command *"Take post"* (or when adopting the action position in later lessons) the No. 1 checks that the day/night switch is at the appropriate setting, opens the protective covers, adopts a lying position on the left of the firing post and focusses the eyepiece. He then puts his left hand on the firing handgrip and his right hand on the elevation handgrip. The No. 1's body should be at an angle of 800 mils to the firing post with feet slightly apart and chest slightly raised. The DC/No. 1's weight must be supported on his elbows, with his eye level with the eyepiece. In this position the DC/No. 1 can traverse the firing post considerably (see Fig 60). If a thermal image is required lower the daylight filter and switch on MIRA. If a thermal image is not required raise the daylight filter and leave MIRA switched off. Care must be taken not to raise the cover beyond the horizontal position or damage will occur. The No. 2 lies on the right of the firing post and at right angles to it. He removes the covers from the ammunition tube and places it on the support assembly (*see* Fig 61). He then prepares the next ammunition tube.

02119. ***Stand Clear.*** *Explain:* If the DC/No. 1 wishes to get the team away from the firing post the following drill is used:

a. The No. 1 closes the protective and eyepiece covers and if necessary switches off the day/night switch and MIRA. He then orders *"Stand clear".*

b. The No. 2, on hearing *"Stand clear"* from the No. 1, removes the ammunition tube, replaces the centre cover and stands clear.

02120. *Confirm by practice. Explain the words of command to be used, i.e., the instructor orders "No. 1 get the team into their action positions"; on this order the No. 1 gives the command "Take post".*

02121. ***Aiming in Cold Conditions.*** *Explain:* When operating in cold or wet conditions heat from the firer's eye may cause misting of the eyepiece lens, thus obscuring the field of view. To eliminate this the firer's eyebrow only is to be rested on the top part of the eyepiece so that air is permitted to pass between his eye and the lens. Care must also be taken by the firer to ensure that he does not breathe on

the lens when adopting this firing position and that he makes any focussing adjustment that may be necessary.

02122. ***Fire Trench.*** *Explain:* When adopting a firing position in a trench the DC/ No. 1 will be on the left of the firing post and must be able to stand and keep both elbows firmly rested on the parapet. At the moment of firing he is to ensure that his body is clear of the support assembly. The No. 2 will stand on the right of the firing post. In all other respects the drills are the same as in the prone position.

02123. ***Loading and Unloading.*** *Explain and demonstrate:* The load and unload take place in the action position.

a. *Load.* The No. 1 checks that the safety flap is at 'Safe', maintains a firm hold with both hands and orders *"Load"* and continues to observe the killing area. The No. 2 checks that the rear blast area is clear, he then ensures that the latch has been depressed by the flange on the junction box and slides the tube forward. Providing that the ammunition tube has been kept upright it will automatically lock on to the support assembly (*see* Figs 61 and 62). The No. 2 checks that the tube is locked on correctly, by trying to pull it to the rear. He then reports *"Loaded"* and observes the killing area ready to assist the No. 1 in target selection.

b. When this stage is reached the firing post is said to be 'In Action'. The No. 2, when carrying out his duties, must maintain as low a silhouette as possible. If, when checking the rear blast area, the No. 2 sees that it is not clear he must clear the area before loading. It may be necessary to check the rear blast area periodically (if the firing post remains loaded) to ensure that no one has encroached into it.

c. *Unload.* The No. 1 checks that the safety flap is at 'Safe', steadies the firing post and orders *"Unload"*. The No. 2 supports the ammunition tube by the carrying handle, presses down on the latch and pulls the tube to the rear completely disengaging the male and female connectors. He leaves the ammunition tube resting on the support assembly and reports *"Unloaded"*.

d. *Unload — Stand Clear.* When the No. 1 wishes to get the team clear of the firing post from the 'In Action' position the following drill will be carried out:

(1) The No. 1 orders *"Unload"*.

(2) On hearing *"Unloaded"* from the No. 2 the No. 1 orders *"Stand clear"*.

02124. *Confirm by practice. Explain the words of command to be used.*

02125. ***Weapon Safety.*** *Explain:* Because it is not possible to distinguish whether or not a firing post with an ammunition tube on the support assembly is

loaded, all firing posts with an ammunition tube on are to be treated as loaded (ready to fire). Loaded firing posts should be treated with extreme caution and only approached directly from the flank.

Conclusion

02126. ***End of Lesson Drill.***

a. *Confirm the complete lesson.*

b. *Pack kit.*

c. *Summarize the main points.*

d. *Stress the necessity for the detachment to be trained in all duties so that in the event of casualties the firing posts can be maintained in action.*

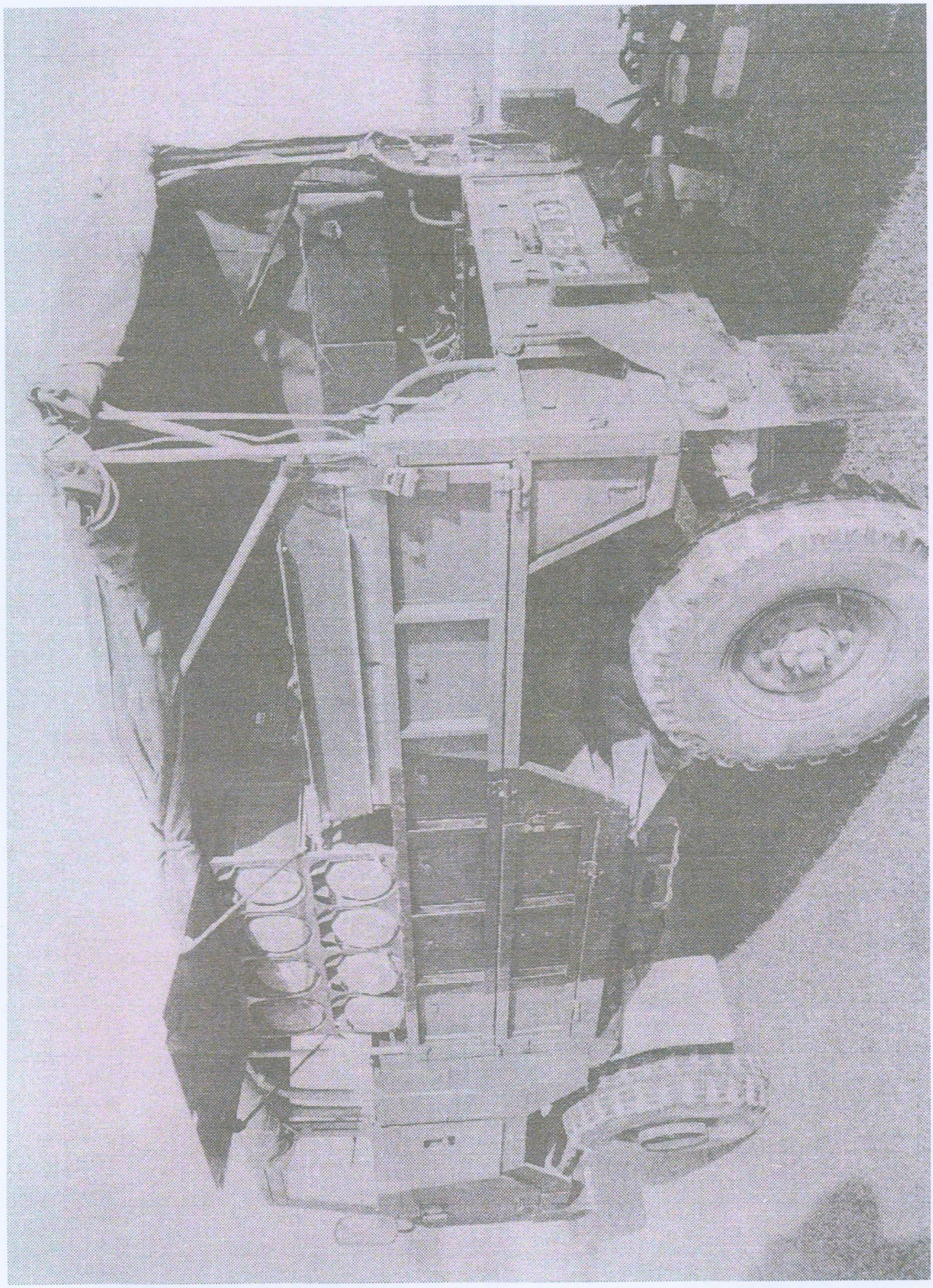

Fig 49. — Stowage and Seating, 1 Tonne

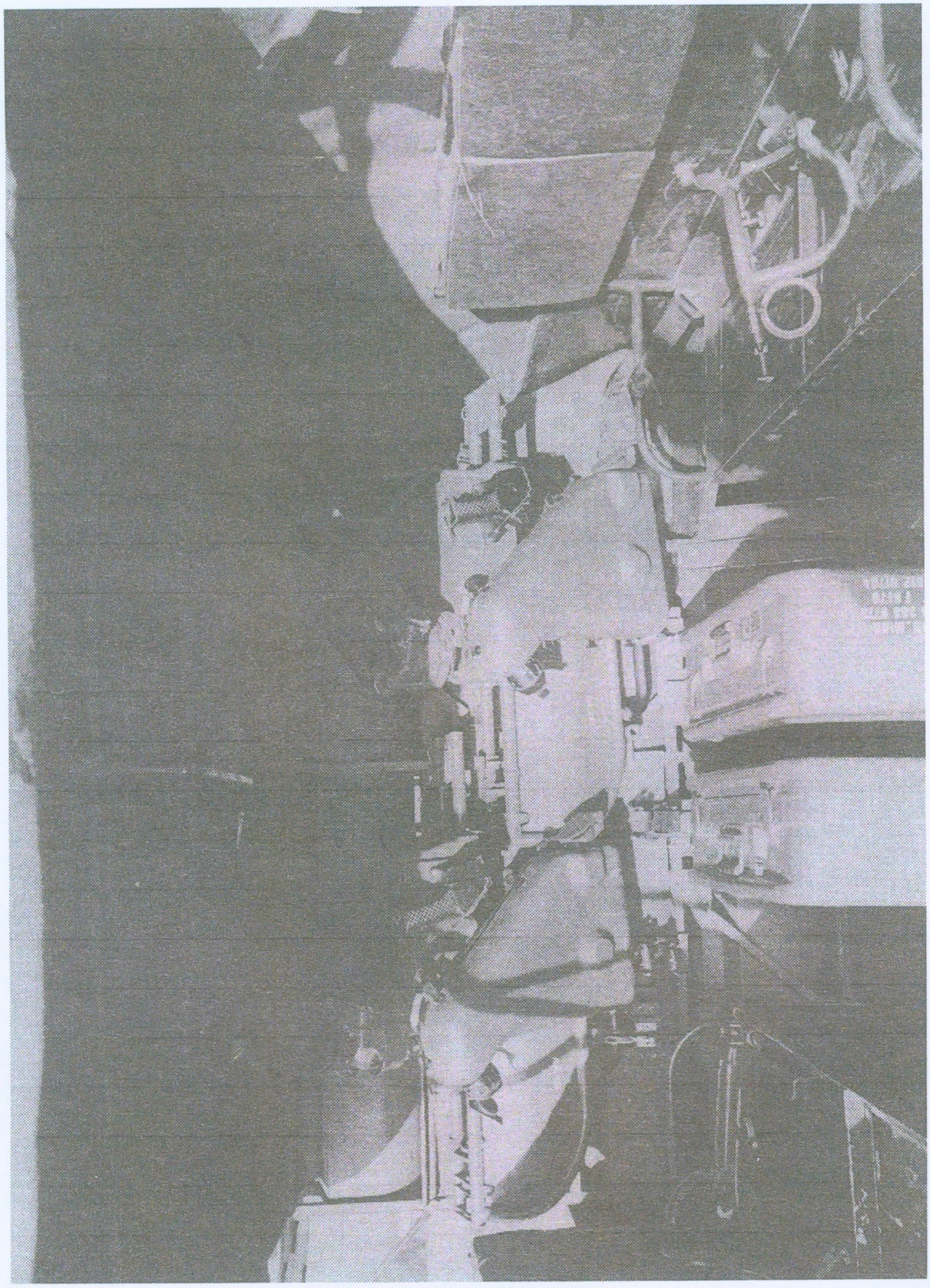

Fig 50. — Firing Posts and MIRA Secured in the Vehicle

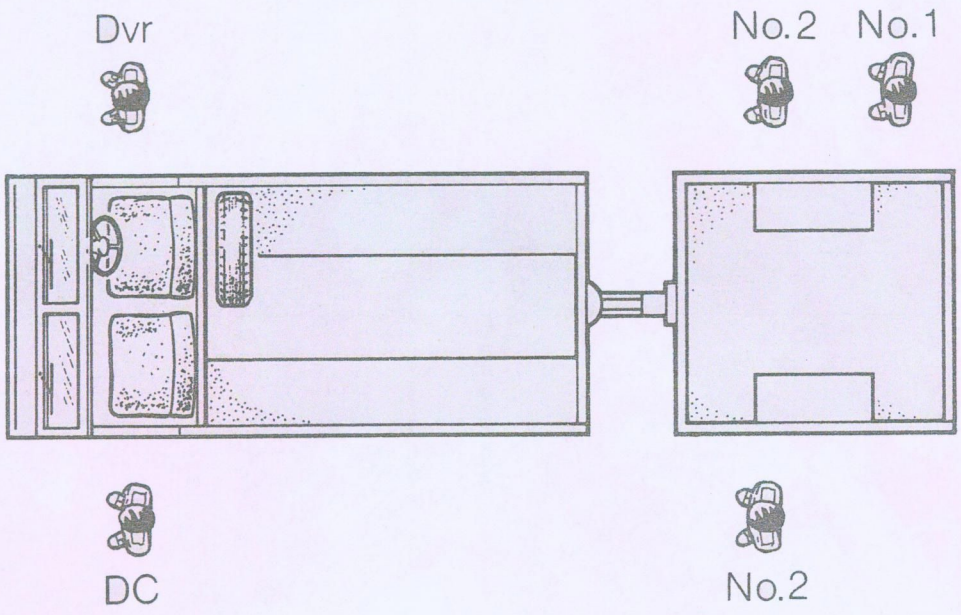

Fig 51. — Fall In Positions

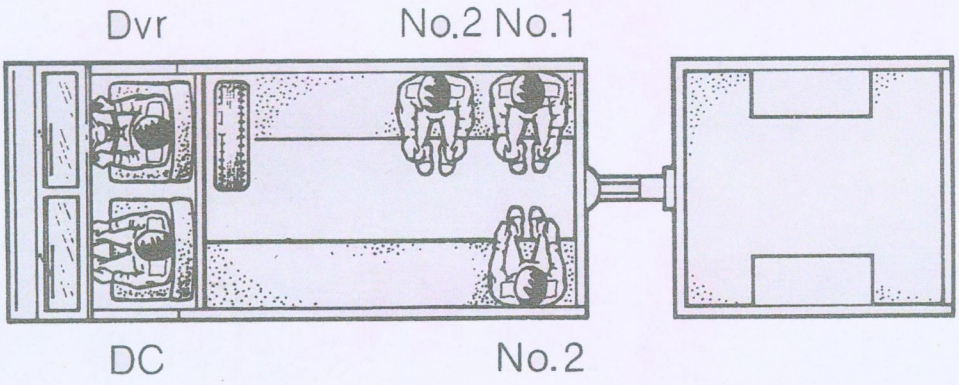

Fig 52. — Positions in the Vehicle

Fig 53. — Shoulder Carry, Front

Fig 54. — Shoulder Carry, Rear

Fig 55. — Cradled, Tripod Legs Open

Fig 56. — Cradled, Tripod Legs Closed

Fig 57. — Using the Carrying Handle

Fig 58. — Using the GS Carrier

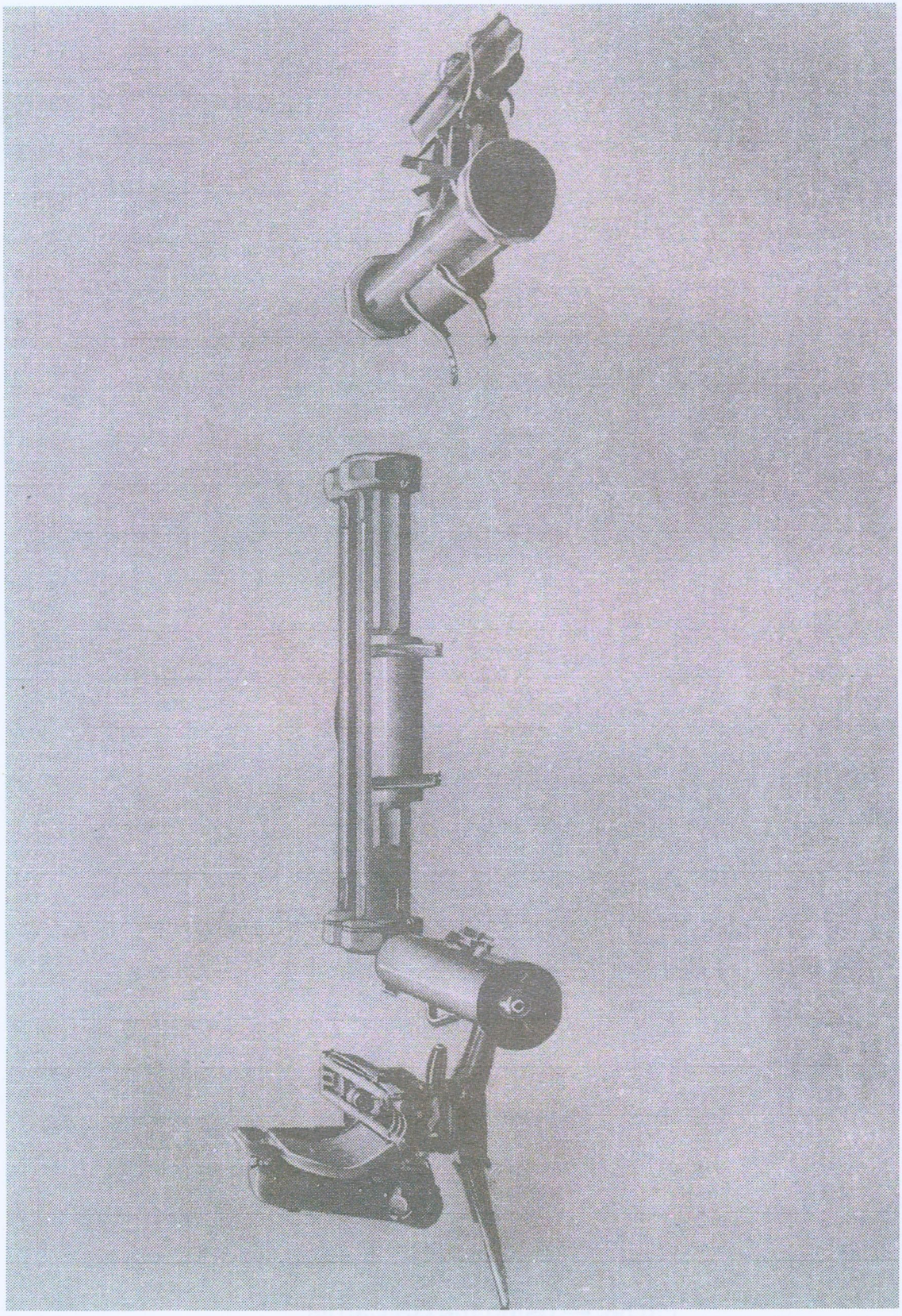

Fig 59. — Ammunition Layout

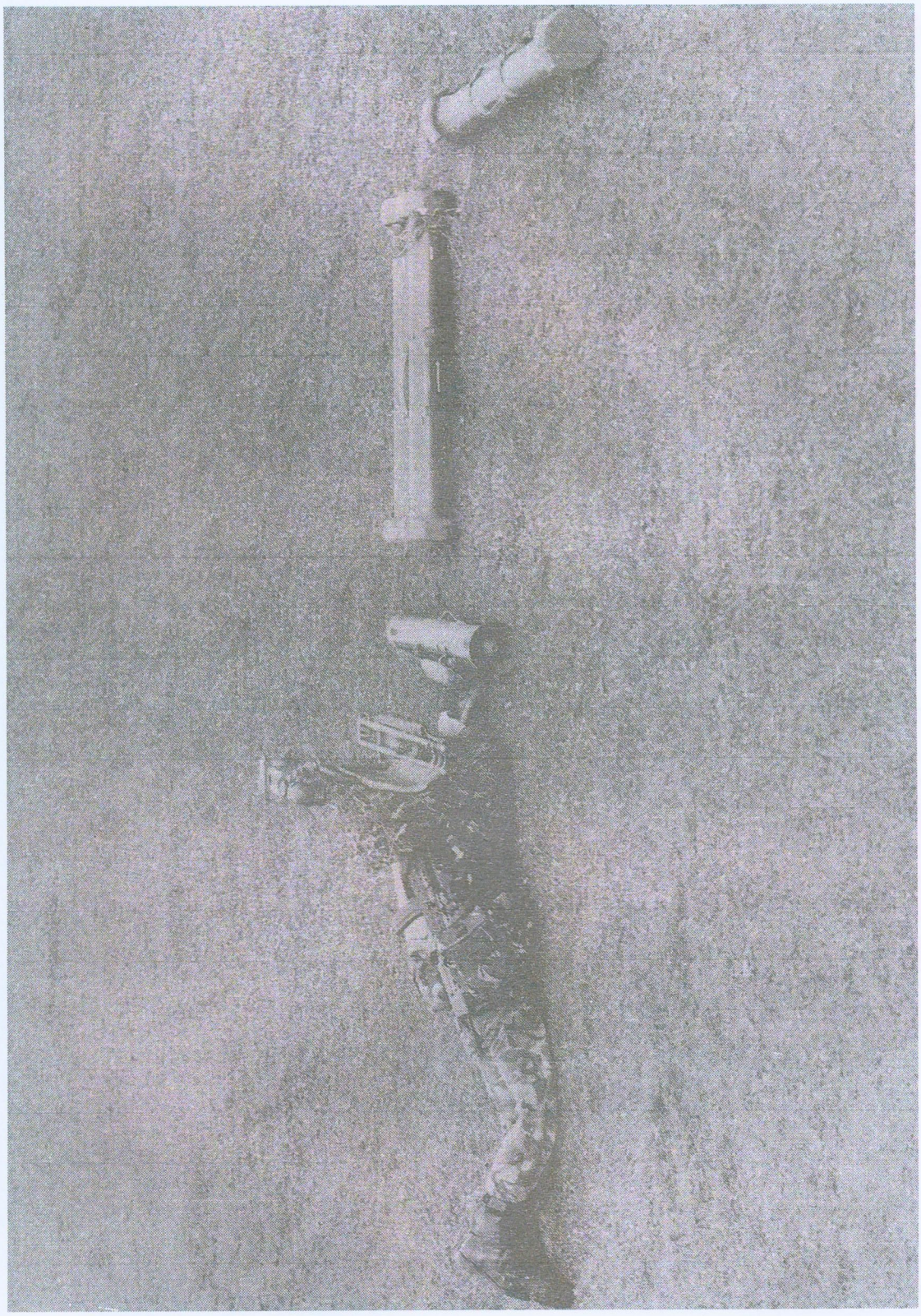

Fig 60. — No. 1's Action Position

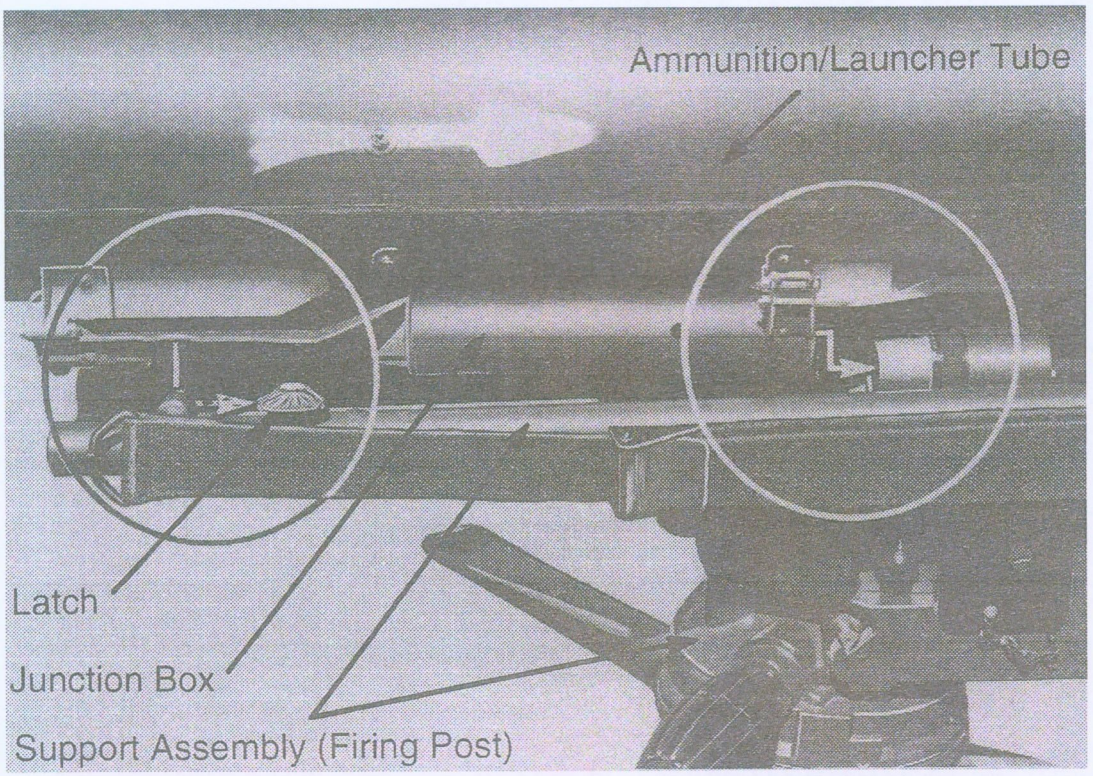

Fig 61. — Fitting the Ammunition Tube

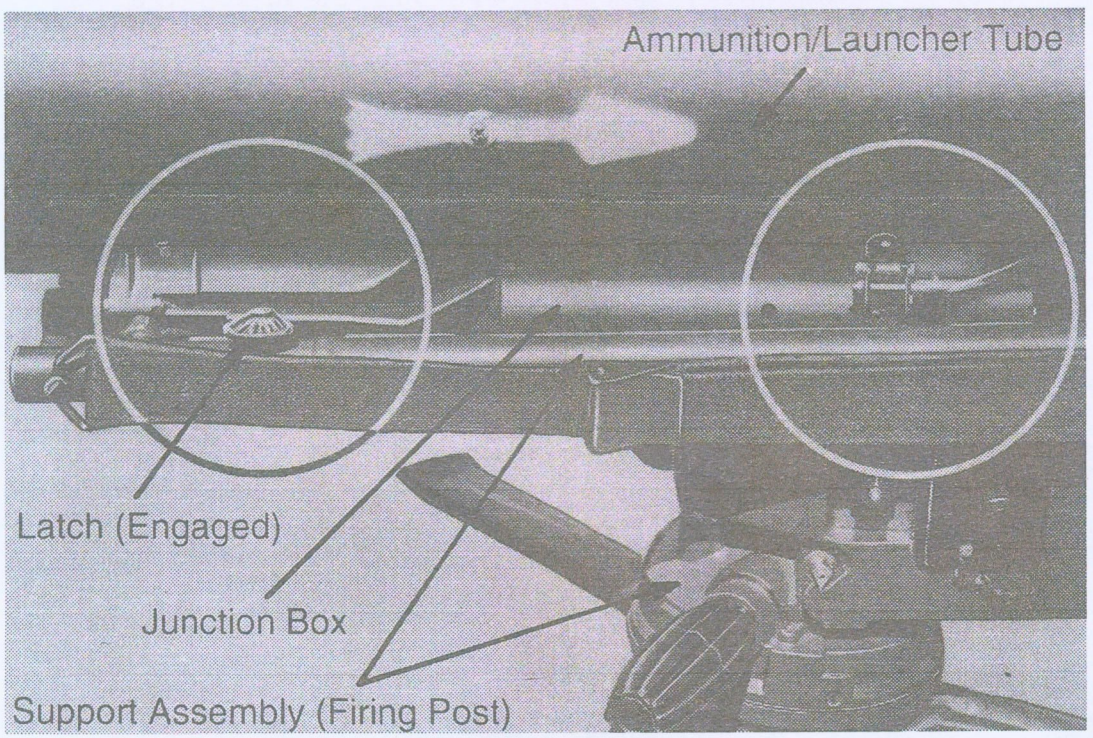

Fig 62. — Ammunition Tube Loaded

LESSON 10. — ACTION AND CEASE FIRING

A. INSTRUCTOR'S NOTES

02127. ***Aim.*** *To teach the drill for bringing the firing post into and out of action on the ground.*

02128. ***Timings.*** *Two 40 minute periods.*

02129. ***Method.*** *A basic instructional outdoor lesson.*

02130. ***Stores.***

Two firing posts
Two MIRA complete
Eight drill ammunition tubes and shoulder straps
One 1 tonne vehicle and trailer (fitted for MILAN)
Two fire position markers
Two representative tank targets

02131. ***Preparation.*** *All stores and ammunition correctly stowed on the vehicle. Place out fire position markers, DCs nearest the main tank threat. Issue a DC's brief.*

B. CONDUCT OF THE LESSON

Preliminaries

02132. ***Safety Precautions.*** *Detail the squad to carry out safety precautions under supervision.*

02133. ***Revision.*** *Ensure that the squad are familiar with the following points, end revision with the firing posts and ammunition stowed on the vehicle.*

a. *"Fall in", "Mount", "Dismount" and "Fall out".*

b. *Removing, replacing, carrying and positioning the firing post and MIRA.*

c. *Taking out and replacing the ammunition.*

d. *Ammunition layout.*

e. *Action positions ("Take post" — "Stand clear").*

f. *"Load" and "Unload".*

Introduction

02134. *Explain:* Anti-tank defence depends to a great extent on the speed at which detachments can bring their firing posts into action in previously reconnoitred positions.

Action Drills

02135. *Explain:* The word of command *"Ground action"* is used by the DC to bring both teams into action.

02136. ***Ground Action***. *Explain:* On the command *"Ground action"* the detachment act as follows:

a. The driver stops the vehicle and applies the handbrake (but keeps the engine running). He dismounts, moves around the front of the vehicle and starts to off-load the ammunition. He will then move ammunition and stores to the DC's fire position.

b. The DC's No. 2 dismounts taking with him the ready for use ammunition tube and immediately takes another ammunition tube from the rack (or driver).

c. The No. 1 dismounts.

d. The DC dismounts, moves to the rear of the vehicle and receives his firing post and MIRA from the (remaining) No. 2.

e. The No. 2 then passes the remaining firing post and MIRA to his No. 1, dismounts and picks up two ammunition tubes.

f. The DC sends the No. 1 and No. 2 to their fire position (giving an indication to the direction of fire). The DC then takes his firing post (followed by his No. 2) to his fire position. He positions the firing post, fits MIRA and switches on (if required) then gives an initial brief to his No. 2. The DC then leaves and briefs the team of the other firing post. The DC's No. 2 inspects an ammunition tube and places it on the support assembly. (From this position the firing post can, in an emergency, be operated by one man.) The No. 2 then inspects all ammunition as it is delivered by the driver, replacing the covers on completion.

g. The No. 1 positions his firing post, fits MIRA and switches on (if required) and then fetches the remaining ammunition and stores. The No. 2 will inspect an ammunition tube and place it on the support assembly. He then inspects the remaining ammunition replacing the covers on completion. The team will receive a brief from the DC. When all stores and ammunition are on the position the No. 1 orders *"Take post — load"*. This firing post is now 'In Action'.

h. The DC, having given his brief, checks the vehicle is clear of all ammunition and stores then instructs the driver on where to position the vehicle. The DC then returns to his firing post and orders *"Take post — load"* (and completes the briefing to the No. 2). This firing post is now 'In Action'.

i. Whenever possible the driver, having positioned and camouflaged his vehicle, returns to the DC's fire position to assist as required.

02137. ***On Active Service.*** *Explain:* During battle it may not always be necessary to have both firing posts manned at all times and this will be covered in the DC's brief. For drills it will be assumed that the tank threat is imminent and the drill taught is to be used.

Cease Firing Drills

02138. *Explain:* The detachment must be able to get their firing posts out of action quickly so that:

a. In the attack they can follow up the battle and help the reorganization on the objective.

b. In the withdrawal they can deny a position to the enemy until the last possible moment and then get away quickly.

02139. ***Cease Firing.*** *Explain:* When the position is to be vacated the DC calls the vehicle forward and informs his other firing post to prepare to 'Cease firing' (if necessary by radio, line or runner). The following actions then take place:

a. The No. 1 and No. 2 (on receiving the order to prepare to cease firing) gather all stores together and the No. 2 replaces all ammunition covers (except for the loaded ammunition tube).

b. The driver brings forward the vehicle and positions it as indicated by the DC. He prepares the vehicle ready to receive the stores and ammunition then assists in transporting equipment to the vehicle.

c. When the vehicle approaches the No. 1/DC ensures that the safety flap is at 'Safe' and orders *"Unload".*

d. The No. 2s unload the ammunition tubes and report *"Unloaded".*

e. The No. 1/DC then orders *"Cease firing"*, closes the protective and eyepiece covers, switches off the MIRA and day/night switch, removes MIRA and replaces the lens cover, and returns the MIRA and firing post to the vehicle. They then return to the position to assist in the transporting of ammunition and stores.

f. The No. 2s remove the ammunition tube from the support assembly, replace the rear and centre covers and begin transporting all unfired ammunition and stores to the vehicle.

g. The DC then checks that all stores and ammunition are accounted for, ensures that the firing posts and MIRAs are secured and orders *"Mount"* and *"Drive on"*. The covers and straps on the ammunition tubes are secured as soon as is convenient.

02140. *Confirm by practice.*

02141. ***On Active Service.*** *Explain:* During battle firing posts are often a considerable distance apart which may necessitate moving the vehicle. On these occasions the DC's firing post always ceases firing last.

02142. *Confirm by practice.*

Conclusion

02143. ***End of Lesson Drill.***

a. *Confirm the complete lesson.*

b. *Pack kit.*

c. *Summarize the main points.*

d. *Stress that the anti-tank defence often depends on the speed in which the detachments can come into and out of action.*

LESSON 11. — FIRING AND ACTION ON MISFIRE

A. INSTRUCTOR'S NOTES

02144. ***Aim.*** *To teach:*

a. *The drill for firing the missile.*

b. *The action if a missile fails to fire.*

c. *The action on in flight failure.*

02145. ***Timings.*** *Two 40 minute periods.*

02146. ***Method.*** *A basic instructional outdoor lesson.*

02147. ***Stores.***

Two firing posts
Two MIRA (complete)
Eight drill ammunition tubes and shoulder straps
One 1 tonne vehicle and trailer (fitted for MILAN)
Representative tank targets
Two fire position markers

02148. ***Preparation.***

a. *Ground should be carefully selected to provide an arc of fire of at least 800 mils in width and a minimum of 30 metres in depth.*

b. *Representative tank targets are to be sited within the selected arc of fire. Ideally these should be correctly scaled and present a variety of targets, e.g., hull down, side view, head on, etc. Place out fire position markers (DC's nearest the tank threat). Issue DC's brief.*

B. CONDUCT OF THE LESSON

Preliminaries

02149. ***Safety Precautions.*** *Detail the squad to carry out safety precautions under supervision.*

02150. ***Revision.*** *Revise "Ground Action", "Cease Firing"and "Stand Clear". Leave the firing posts set up, pointing into the centre of the arc of fire.*

Introduction

02151. *Explain:* Safe efficient drills are essential if the team is to function properly in battle. All members of the detachment must be proficient in carrying out the firing, misfire and 'in flight' failure drills.

Firing Procedure

02152. ***Duties of the No. 1.*** *Explain and demonstrate:* If a thermal picture is required to carry out an engagement the No. 1 must ensure that the brightness, contrast and focus controls are set so that as clear as possible an image of the target is obtained. The No. 1 checks the rules for target engagement taught in Lesson 7, i.e., range estimation, 75 mil and decoy problems, puts the safety flap to 'Fire', pre-aims and in the case of a moving target begins tracking, ensures his elbows are firmly on the ground and his shoulders clear of the support assembly. He then steadily presses the firing button. When the missile has left the ammunition tube and the smoke has cleared, he will immediately re-aim and continue to track the target, maintaining a correct aim throughout the flight of the missile. On completion of the engagement he puts the safety flap to 'Safe' and orders *"Cut"*. If MIRA is being used it may be necessary for the No. 2 to indicate to the DC/No. 1 when the missile has impacted.

02153. ***Duties of the No. 2.*** *Explain and demonstrate:* The No. 2 on the order *"Cut"*, presses the latch, removes the junction box, throws it clear, checks that the rear blast area is clear, loads, reports *"Loaded"* and prepares the next ammunition tube.

02154. ***Rear Blast Area.*** *Explain:* Throughout the engagement of targets the No.2 must ensure that he conforms to the movement of the firing post. Failure to do this could result in the No. 2 being either in the rear blast area or in front of the missile when it is fired.

02155. *Confirm by practice using the words of command, "Engage", "Fired", "Tracking" and "Impact".*

Misfire Drill

02156. *Explain:* If the missile fails to fire when the firing button is pressed certain actions which should become instinctive are carried out, so that firing can be resumed with as little delay as possible.

02157. ***Immediate Action.*** *Explain and demonstrate:* If, when the firing button is pressed, the missile fails to fire: the No. 1 must continue to track the target and press the firing button a further three times at five second intervals. If the missile fires, the No. 1 will continue the engagement as normal.

02158. *Confirm by practice using the words of command, "Engage", "Not fired", (three times) and "Fired".*

02159. ***Subsequent Drill.*** *Explain and demonstrate:* If the immediate action fails to fire the missile the following drill is to be carried out:

a. The No. 1 puts the safety flap to 'Safe', orders *"Misfire"* and maintains a correct aim on the target.

b. On the command *"Misfire"*, The No. 2 repeats the order *"Misfire"* and times a pause of one minute. After one minute the No. 2 reports *"Up"*, feels the junction box around the area of the thermal battery to see if it is warm, and the team move 200 metres away from the firing post, No. 2 to the right flank, No. 1 and safety supervisor to the left flank.

c. After 15 minutes the ammunition technical officer returns to the firing post and feels the junction box for heat:

(1) If the junction box is warm, the ammunition tube is unloaded and either destroyed on the range or returned for examination. The firing post can be used again with another ammunition tube.

(2) If the junction box is cold, the ammunition tube is unloaded and can be used again but the firing post is to be electrically tested.

(3) If two misfires occur during a range practice and each time the junction box is warm, the firing post is to be electrically tested.

02160. *Confirm by practice, using the words of command "Engage", "Not Fired" (four times) and "One minute over". (The instructor is to complete at least one practice with a full one minute pause.)*

Failures

02161. ***In Flight Failure.*** *Explain:* There may be occasions during firing when the missile fails to enter the field of view (150 mils), or during flight, suddenly leaves the 20 mil circle. In each case the following drill is to be carried out:

a. The No. 1 puts the safety flap to 'Safe' and orders *"Cut".*

b. On the command *"Cut"*, the No. 2 presses the latch, waits until the missile has grounded, then removes the junction box, throws it clear, checks that the rear blast area is clear, reloads, reports *"Loaded"* and prepares the next ammunition tube.

c. If the MIRA is being used it may be necessary for the No. 2 to indicate to the DC/No. 1 that the missile has deviated from its correct flight path.

02162. *Confirm by practice using the words of command, "Engage", "Fired", "Fails to appear" or "Tracking", "Disappears" and "Impact".*

Active Service

02163. ***Misfires.*** *Explain:* If a misfire occurs on active service, the No. 1 is to carry out the immediate action. If it still fails to fire, the ammunition tube is to be unloaded immediately and a fresh one loaded. (The misfired ammunition tube is to be positioned in the safest place and direction practical.)

02164. ***In Flight Failures.*** *Explain:* If an in flight failure occurs on active service, the junction box must be removed and a new ammunition tube loaded without waiting for the missile to ground.

Conclusion

02165. ***End of Lesson Drill.***

a. *Confirm the complete lesson.*

b. *Pack kit.*

c. *Summarize the main points.*

d. *Stress the necessity for a thorough knowledge of the lesson to ensure safe handling when live firing.*

Chapter 3

MAINTENANCE

LESSON 12. — STORAGE AND MAINTENANCE

A. INSTRUCTOR'S NOTES

0301. ***Aim.*** *To teach:*

a. *How the ammunition is stored in field conditions.*

b. *How the firing post is stored in barracks and in field conditions.*

c. *How to carry out the pre-firing inspection of the ammunition.*

d. *How to inspect and clean the firing post.*

e. *How to inspect and clean the MIRA.*

0302. ***Timings.*** *Two 40 minute periods.*

0303. ***Method.*** *A basic instructional indoor lesson.*

0304. ***Stores.***

One firing post and logistic container
One instructional ammunition tube
One empty ammunition logistic container
Cleaning materials, to include:
Dusting cloths
Lens cleaning material
Lens brush
Oil
Talcum powder
White spirit
Drop or vufoil of the ammunition third safety
Overhead projector and screen
One MIRA complete

0305. ***Preparation.*** *Firing post and ammunition tube out of sight under table. Logistic containers, cleaning materials, overhead projector and vufoil to hand. Seating arranged for the squad. Ensure that the ammunition tube is of an instructional nature.*

B. CONDUCT OF THE LESSON

Preliminaries

0306. ***Safety Precautions.*** *Explain: The ammunition tube has been checked and is of an inert/instructional nature and all air bottles and batteries are in a serviceable condition.*

Introduction

0307. *Explain:* In battle and during training it may be necessary to store ammunition and firing posts for some time. It is important that all members of the MILAN platoon fully understand the short term storage conditions, how to inspect and clean the firing posts and how to keep them in a serviceable condition.

Storage

0308. ***Ammunition Storage.*** *Explain:* For short term storage in the field, the ammunition should be kept in its logistic container. The logistic container is sealed and provides ample protection from climatic conditions; however, whenever possible a shelter should be erected to protect the containers from weather conditions. Each container has matching male and female mouldings to ensure proper stacking. Containers must not be stacked more than five high. In the event of accidental immersion in water the logistic container will give protection to the ammunition for up to 48 hours.The temperature limitations in storage are from –10°C to +35°C. However, the ideal temperature range is from +5°C to +25°C. In extreme weather conditions it can be stored for short periods of time in temperatures ranging from –40°C to +52°C. In the event of a fire occurring where ammunition is stored, a safety device known as a fusible plug is situated in the mechanical arming device. The fusible plug melts (at 96°C) and even if the rocket motor ignites the gas pressure is diverted away from the mechanical alarming device preventing the fuse being armed (*see* Fig 29).

0309. *Confirm by questions.*

0310. ***The Firing Post Storage.*** *Explain:* In barracks, when the firing post is kept in a store it should, whenever possible, be stored in its logistic container. This will ensure that the desiccant packs protect the firing post from any humidity in the air. Should this not be possible (because of limited storage space) the firing post can be stored out of its logistic container or in the vehicle fittings with the tripod either fitted or removed. If the tripod is removed it must be stored with the turntable flat to reduce the risk of drainage of lubricant. In field storage conditions, whenever possible, the firing post must be stored in its logistic container or in the vehicle fittings, if not it is to be stored in a fabric wrapping. The container must always be stored with the lid uppermost to prevent water, mud, etc., from forming on the seal.

Containers must not be stacked more than four high. The firing post in its logistic container can withstand any environmental condition but in order to protect the container a cover should be used whenever possible. The storage temperatures are as for the ammunition.

0311. *Confirm by questions.*

0312. ***MIRA Storage.*** *Explain:* In barracks the MIRA should be kept in a store. It should at all times be stored inside its tactical container. This will ensure that the desiccant bag protects the MIRA from any humidity in the air. Containers must not be stacked more than five high. In field storage conditions the MIRA must be kept inside its tactical container and where possible a protective cover should be erected. If the MIRA is to be stored on the detachment's vehicle it should be inside its tactical container and attached to the vehicle mountings provided. The storage temperatures for the MIRA are as for the ammunition and firing post.

0313. ***Air Bottle Storage.*** *Explain:* Air bottles should be stored inside the twelve bottle containers. These containers should be stacked no more than six high. The storage temperature for the air bottles and batteries is from –10°C to +35°C. However, the ideal temperature range is from 5°C to 25°C. In extreme weather conditions they can be stored for short periods of time in temperatures ranging from –40°C to +40°C.

0314. *Confirm by questions.*

Inspection and Tests

0315. ***Ammunition Pre-firing, Preparation and Inspection.*** *Explain:* Before the ammunition tube is loaded onto the firing post, it must be prepared and inspected.

0316. ***Preparation.*** *Explain and demonstrate:* To prepare the ammunition tube, remove the front, rear and junction box protective covers.

0317. ***Inspection.*** *Explain and demonstrate:* Carry out the following inspection:

Serial	Part	Operational Condition	Possible Fault	Action
1	Membrane	Intact	Broken	Do not use. *See* Note
2	Junction box spring clip	Undamaged and tensioned	Bent or broken	If bent, straighten the clip. If broken do not use

Serial	Part	Operational Condition	Possible Fault	Action
3	Guidance wire	Undamaged and lying flat at the rear without a loop	Damaged/ broken or loop protruding above junction box	Damaged/ broken, do not use. If loop protrudes, flatten loop
4	Junction box six pin plug	Correctly fitted	Disconnected or not fully fitted	Fit correctly
5	Junction box retaining pins	Present and centralized	Off centre or missing	Centralize. If missing, replace or do not use
6	Guide ribs and latch recess	Undamaged	Bent or broken	Do not use. *See* Note
7	Female electrical socket (exterior only)	Clean and undamaged	Dirty or damaged	If dirty, clean and use. If damaged, do not use
8	Gas generator ignition wire	Undamaged	Damaged or broken	Do not use
9	Complete tube	Intact	Cracked or punctured	Do not use

Ammunition Pre-Firing, Preparation and Inspection

Note. On active service it is permissible to use an ammunition tube with a broken membrane as long as the warhead is not damaged. It is also permissible to use an ammunition tube with damaged guide ribs providing the locking devices function correctly.

0318. *Confirm by practice.*

0319. ***The Firing Post Inspection and Tests.*** *Explain and demonstrate:* The firing post must be inspected and tested to ensure that it is operating correctly. Any faults found should be reported to the unit REME for rectification. The inspection

and tests that follow, should be carried out on the following occasions:

a. Before range firings.

b. After range firings.

c. Before deployment on operations.

d. Daily on operations.

e. Immediately following a long period of storage.

f. Immediately following a long period of transit.

g. At any other time considered necessary.

Serial	Part Operation	Operational Condition	Possible Fault	Action
1	Tripod legs and clamp levers	a. Legs unfold smoothly. Teeth on clutch plates intact and will engage to lock the legs in position	a. Legs stiff to unfold. Teeth broken. Spring in clamp levers broken	a. Unit REME
2	Rotation	a. Firing post should rotate through 6400 mils, there should be no noticeable change in torque	a. Change in torque	a. Unit REME
		b. Grease nipple caps present, no leakage of grease	b. No caps, leakage of grease	b. Replace caps. If leaking, unit REME
		c. Seal between platform and turntable intact. No leakage of grease	c. Leakage of grease	c. Unit REME

Serial	Part Operation	Operational Condition	Possible Fault	Action
3	Elevation of the firing post	a. Should operate smoothly throughout its limits, there should be no noticeable change in torque	a. Change in torque	a. Unit REME
		b. Rubber finish of elevation handgrip not cracked or perished	b. Rubber cracked or perished	b. Unit REME
4	Day/Night switch and reticle illumination	Switch should operate smoothly in both positions and reassert itself in the day position	a. Switch jammed	a. Unit REME
			b. No illumination	b. Change batteries and check again. If no illumination, unit REME
5	Guidance electronics pack male	a. Insulation free of cracks	a. Insulation cracked	a. Unit REME
		b. Contacts free of corrosion	b. Contacts dirty/corroded	b. Clean contacts
		c. Outer sleeve reasserts itself after being pulled back	c. Outer sleeve stiff or jammed in either position	c. Clean and re-test, if still jammed, unit REME

Serial	Part Operation	Operational Condition	Possible Fault	Action
6	Support assembly locking devices	a. The latch should depress and reassert itself smoothly when operated	a. Latch stiff or jammed in either position	a. Clean and re-test, if still jammed, unit REME
		b. The ball lugs and the machined groove should be clean and undamaged	b. Ball lugs and/or machined groove damaged	b. Unit REME
7	Electrical connection, guidance electronics pack to tracker	a. Undamaged	a. Damaged	a. Unit REME
		b. The outer sleeve should be locked in place and the orange bands visible	b. Orange bands not visible	b. Fit correctly
8	Safety flap and firing button	a. Safety flap and firing button should operate correctly	a. Safety flap damaged or loose. Firing button presses with normal resistance	a. Unit REME
		b. Rubber seal intact	b. Rubber seal perished	b. Unit REME
9	Focussing	a. Focussing ring operating correctly	a. Ring jammed or not operating correctly	a. Unit REME
		b. Rubber eye-piece intact	b. Rubber cracked or perished or cover detached	b. Unit REME

Serial	Part Operation	Operational Condition	Possible Fault	Action
10	General			
	a. Both humidity indicators	a. Humidity indicators blue/white	a. Humidity indicators pink	a. Unit REME
	b. Lens cover	b. Lens cover intact and operating correctly	b. Cover bent, not operating correctly	b. Unit REME
	c. Major components	c. No cracks in any major component	c. Cracks in any major component	c. Unit REME
	d. All rubber seals	d. Intact and in good condition	d. Damaged or perished	d. Unit REME
	e. Test connector, protective cover and chain	e. Intact and serviceable	e. Connection dirty/damaged	e. Clean/Unit REME
	f. Tripod and guidance electronics pack locking devices	f. Detach the tripod. Locking devices should be undamaged	f. Damaged	f. Unit REME

Firing Post Inspection and Tests

0320. *Confirm by practice.*

0321. ***MIRA Inspection and Tests.*** *Explain and demonstrate:* The MIRA must be inspected and tested to ensure that it is operating correctly. Any faults found should be reported to the unit REME for rectification. The inspection and tests that follow, should be carried out on the same occasions as the firing post inspections and tests.

Serial	Part	Operational Condition	Possible Fault	Action
1	***MIRA***			
	a. Protective covers	Flush fitting Open in sequence Lock into position	Broken or bent Locking device broken	Unit REME
	b. Gathering lens	Clean and undamaged	Dirty scratched/ broken	Clean Unit REME
	c. Daylight filter	Clean and undamaged	Dirty scratched/ broken	Clean Unit REME
	d. Visible light entry and exit window	Clean and undamaged Rubber bung present	Dirty scratched/ broken Rubber bung missing	 Unit REME
	e. Guide ribs and machined funnel	Undamaged Clean/ undamaged	Bent or broken Dirty Bent or broken	Unit REME Clean Unit REME
	f. Battery housing and running time indicator	Clean Terminals and spring clip undamaged Does not exceed 900 hours	Dirty Damaged Exceeds 900 hours	Clean Unit REME Unit REME

Serial	Part	Operational Condition	Possible Fault	Action
	g. Bottle housing	Clean Probe undamaged Bung in place Securing strap and platforms undamaged	Dirty Damaged or parts missing	Clean Unit REME
	h. Master switch	Operates correctly from bottle release springs to off position	Broken or fails to spring back	Unit REME
	i. Control panel		Damaged/ broken	Unit REME
	j. General overall check	Undamaged	Damaged	Unit REME
2	***Mounting Bracket***			
	a. Plastic studs	Present and secure	Missing/loose	Unit REME
	b. Securing device	Hook is spring loaded Tightening knob secure and working	Spring broken Knob loose or damaged	Unit REME
	c. Forward and rearward locking devices/ mechanism	Secure and undamaged	Loose, worn or damaged	Unit REME
	d. Elevation/ azimuth adjusters	Operate smoothly	Stiff or damaged	Unit REME

Serial	Part	Operational Condition	Possible Fault	Action
	e. Air bottles f. Batteries	) Normal safety) regulations) apply	Any faults found	Back load through Unit REME

MIRA Inspection and Tests

0322. ***MIRA Test.*** *Explain and demonstrate:* To test the MIRA make sure it can be securely fitted to the firing post and that when switched on a thermal picture can be obtained. While observing through the firer's eyepiece adjust the controls to ensure that they are functioning correctly. If any fault is found the MIRA is to be checked by the unit REME.

0323. *Confirm by questions and practice.*

Cleaning

0324. ***Cleaning Materials.*** *Explain:* The following materials are required to clean the firing post:

a. Dusting cloth.

b. Lens cleaning material (cloth or tissue)

c. Lens brush.

d. Oil.

e. Talcum powder.

f. White spirit.

0325. ***The Firing Post.*** *Explain and demonstrate:* It is important that only the recommended cleaning materials are used. Failure to do this may result in permanent damage. To clean the firing post:

a. Remove the protective cover from the tracker, thoroughly dry clean the cover inside and out. The cover should be replaced as soon as possible after cleaning and remain fitted at all times.

b. Remove any dust or mud from the outside of the equipment, using a damp cloth.

c. Stubborn grease or oil can be removed from any of the main assemblies by using a cloth and white spirit.

d. Coat the rubber parts with talcum powder to prevent them becoming brittle.

e. Lenses must be cleaned using only the correct lens cleaning material and care should be taken in order to prevent the lenses becoming scratched. The lens brush must be used first, to remove any small particles, followed by the lens cloth/tissue. Do not attempt to remove scratches from any lens. The presence of condensation on the inside of any lens should be reported to the unit REME.

f. All metal parts should be lightly oiled, taking care not to get oil on the lenses and rubber parts.

0326. *Confirm by questions and practice.*

0327. ***The MIRA.*** *Explain and demonstrate:* The MIRA is cleaned in the same way and using the same materials as the firing post.

0328. *Confirm by questions and practice.*

Conclusion

0329. ***End of Lesson Drill.***

a. *Confirm the complete lesson.*

b. *Pack kit.*

c. *Summary. To include the following:*

(1) *The importance of correct storage.*

(2) *The necessity for regular inspection of the system in order to keep it in a serviceable condition.*

LESSON 13. — UNIT TESTER MK 1

A. INSTRUCTOR'S NOTES

0330. ***Aim.*** *To teach the unit tester and its uses.*

0331. ***Timings.*** *Two 40 minute periods.*

0332. ***Method.*** *A basic instructional indoor lesson.*

0333. ***Stores.***

One firing post
One unit tester
Two charged 12 volt batteries
One shorting strip
One torch

0334. ***Preparation.*** *Firing post set up. Seating arranged for the squad. Unit tester to hand. Remainder of stores out of sight. Ensure that the unit tester batteries are charged and the two 12 volt batteries are connected by the shorting strip.*

B. CONDUCT OF THE LESSON

Introduction

0335. *Explain:* The unit tester enables an operator to check that the firing post is functioning correctly without firing. It is important that each member of the MILAN anti-tank platoon knows how to carry out the test of the firing post, so that in action the firing post will function correctly when required to do so.

Unit Tester

0336. ***Characteristics.*** *Explain and demonstrate:* The unit tester is a compact portable unit. It is robust in construction and weighs 30 kilogrammes. Its function is to provide the team with a simple 'Go/No go' indication of the combat readiness of the firing post. The tester will operate from any external power supply between 21 and 29 volts DC, but if this is not available it is equipped with its own power supply. The tester will operate in extreme climatic conditions, although the internal power supply is adversely affected by conditions of extreme cold.

0337. ***Description.*** *Explain and demonstrate:* The tester (*see* Fig 63), is housed within a case equipped with two fold-away handles for ease of carriage. Stencilled on the lid and both sides of the body are the words MILAN and the tester serial number.The complete equipment may be divided into five main assemblies, as follows:

a. The lid.

b. The junction box.

c. The collimator.

d. The body.

e. The battery pack.

0338. *Confirm by questions.*

Detailed Description

0339. ***The Lid*** (*see* Fig 64). *Explain and demonstrate:* The lid is designed to protect the working face and the components housed on it. Made of moulded plastic,it is secured to the body by six quick release catches. The edge of the lid is designed to ensure an efficient seal when fitted to the body. Stored inside the lid are the external power supply cable and a plastic accessory pack containing: ten lens cloths, two fast melting ten amp fuzes and an extractor (for the collimator diaphragm (*see* Annex E)). Secured to the inside of the lid are the operating instructions. A white mark on the outside of the lid corresponds to a similar mark on the body and ensures correct fitting of the lid. A small partition inside the lid prevents it from fitting onto the body if the junction box is not correctly positioned on the working face.

0340. *Confirm by questions.*

0341. ***The Junction Box*** (*see* Fig 65). *Explain and demonstrate:* The junction box is attached to the body of the tester by means of locking devices, similar to those on the support assembly. It is held in place by two straps fitted with quick release catches. To remove the junction box release the straps, depress the latch and pull the junction box to the rear. Externally the junction box on the tester resembles the junction box fitted to the ammunition tube and will fit onto the support assembly in the same way. The socket located on the top of the junction box is used during the self test phase, to connect the plug of the thinner of the two cables. During the firing post test this plug is connected to the test socket on the guidance electronics pack. The plug on the thicker of the two cables connects to a socket on the working face of the tester.

0342. *Confirm by questions.*

0343. ***The Collimator*** (*see* Fig 66). *Explain and demonstrate:* The collimator is supported on the working face by three brackets and secured by two straps. To remove the collimator, undo the two straps and lift it clear. To remove the plug from the working face, pull the outer sleeve of the plug up and it will disengage from the socket on the working face. To replace the plug, align the cut away part of the plug with the corresponding part on the socket. Apply a little downward pressure on the plug and at the same time force the outer sleeve down. The plug is correctly fitted when an orange ring is visible above the outer sleeve. The collimator has a cylindrical body. At one end are located the optical system and the locking ring which enables the collimator to be attached to the lens of the tracker. At the other end are located the focussing ring,which incorporates a diaphragm, through the centre of which there is an aperture, two adjustment knobs for elevation and azimuth and a cable which connects to the socket on the tester. During the self test, the collimator is secured to the socket on the working face and when testing the firing post it is secured to the tracker.

0344. *Confirm by questions and practice.*

0345. ***The Body*** (*see* Fig 67). *Explain and demonstrate:* The casing is made of light alloy and is designed to protect the operating module which is housed inside the body. On the top of the body, is the working face which is bordered by a rubber insert. This enables a watertight seal to be made between the lid and the body. There are also six locating studs which ensure correct fitting of the lid to the body. The layout of the working face is as follows:

a. Rubber insert.

b. Locating studs.

c. Junction box male connection.

d. Junction box supporting bracket and strap.

e. Junction box locking devices and strap.

f. Collimator brackets and straps.

g. Junction box socket.

h. Collimator socket.

i. 'On' button.

j. Three position switch.

k. Voltage check indicator.

l. 'No go' indicator.

m. 'Go' indicator.

n. Check timing indicator.

o. Voltmeter with luminous display.

p. External power supply socket.

q. 10 amp fuse.

0346. ***Body/Battery Pack Connection.*** *Explain and demonstrate:* On the four corners of the body are quick release catches. The unlocking of these catches enables access to the battery pack. On the underside of the body are two locating studs which engage in corresponding holes in the battery pack to ensure correct fitting. A two pin socket also on the underside of the body connects with two electrical terminals on the battery pack to form the link between the battery pack and the operating module.

0347. ***The Battery Pack*** (*see* Fig 69). *Explain and demonstrate:* The battery pack consists of a case and a lid which are connected together by Allen screws.Access to the Allen screws is gained from the bottom of the case. Also at the bottom of the case are four rubber shock absorbers which support the complete tester. The case provides four locking recesses that are engaged by the quick release catches on the body. Contained inside the lid are 29 nickel cadmium batteries (1.2 volts), which are rechargeable. Leaking nickel cadmium batteries pose a toxic hazard and if handled, hands must be washed. An electrical socket at the side of the lid is provided to enable the batteries to be recharged in situ. The two terminals on the top of the lid can be blanked off by a rubber plug when the body is removed from the battery pack.

0348. *Confirm by questions and practice. End the practice with the tester reassembled.*

Testing

0349. ***Self Test (Internal Supply).*** *Explain and demonstrate:* Before carrying out the electrical test of the firing post, a self test must always be completed. This will ensure that the tester is working correctly. The procedure for the self test is as follows:

a. Remove the tester lid.

b. Check that the three position switch is in the 'Off' position.

c. Release the two straps securing the junction box, push the junction box fully forward into the male socket and check that it is locked correctly by the locking devices.

d. Check that the two plugs on the junction box electrical cables are secured to their respective sockets.

e. Check that the plug on the collimator electrical cable is correctly connected to its socket on the working face.

f. Switch to 'Self test'.

g. Check the voltmeter as follows:

(1) If using the internal supply, that the pointer is in the green zone.

(2) If using the external supply, that the pointer is in the blue zone.

(3) If the pointer is in the red zone it indicates that the external power supply is too high.

h. Press the 'On' button.

i. Check that the voltage check indicator lights.

j. Check that the check timing indicator lights.

k. After approximately 15 seconds check that the check timing indicator goes out and that the 'Go' indicator lights.

l. If the tester has indicated 'Go' then it is ready for use.

m. Switch off.

n. If the tester has reacted in any other way than above, the procedure is to be repeated.

o. If a 'No go' result is obtained again, the tester is to be checked by the unit REME.

0350. *Confirm by practice.*

0351. ***Testing the Firing Post.*** *Explain and demonstrate:* To ensure that the firing post will function correctly when required to do so, it is necessary to test the firing post on the following occasions:

a. Before range firings.

b. Before deployment on operations (including Concentration/Assembly Area).

c. Daily on operations when the tactical situation permits.

d. Immediately following a period of storage.

e. Immediately following a long period of transit.

f. If misfires occur, as in Lesson 11.

g. Every three months.

h. Whenever the electrical operation of the firing post is in doubt.

0352. ***The Electrical Test of the Firing Post.*** *Explain and demonstrate:* When the electrical test of the firing post is carried out, the complete electronic and optical functions are checked. The procedure for carrying out the electrical test is as follows:

a. Check that the three position switch is at 'Off'.

b. Check that the 'Day/Night' switch on the guidance electronics pack is positioned at 'Day' and check that the electrical connection tracker/guidance electronics pack is fitted correctly.

c. Remove the junction box from the tester and lock it onto the support assembly in the same way as an ammunition tube.

d. Remove the plug from the top of the junction box and connect it to the test socket on the guidance electronics pack.

e. Remove the lens cover from the tracker and fit the collimator as follows:

(1) Ensure that the mating faces of the tracker lens and collimator are free from distortion and free from grease. Rotate the collimator locking ring until the two red marks are together.

(2) Position the collimator on the tracker by engaging the locating stud at the bottom of the lens into the recess at the bottom of the collimator. Do not turn the collimator body.

(3) Ensure that the collimator is central and rotate the locking ring clock-wise until it is secure.

(4) Force is not to be used at any stage when fitting the collimator.

f. Open the eyepiece cover on the tracker.

g. Focus the collimator by using the focussing ring until the sharpest possible image of the reticle and the green spot is obtained.

h. Using the elevation and azimuth adjusting knobs, centralize the cross hair

of the reticle onto the green spot. In poor light conditions, it may be necessary to shine a torch into the firer's eyepiece to provide illumination to carry out the procedures at sub paragraphs **g.** and **h.**

i. Switch to 'Test'.

j. Check the voltmeter.

k. Press the 'On' button and check that the voltage check indicator lights. All other lights should go off.

l. Move the safety flap to 'Fire' and press the firing button. Allow at least two seconds to elapse between pressing the 'On' button and pressing the firing button. The safety flap must remain at 'Fire' throughout the test.

m. Check that the Check timing indicator lights and remains lit for approximately 15 seconds.

n. Check that either the 'Go' or 'No go' indicator lights.

o. If the 'Go' indicator lights, the firing post will function correctly.

p. Switch off.

q. If the tester has reacted in any other way than above, the procedure is to be repeated.

r. If a 'No go' result is obtained again, the firing post is to be checked by the unit REME.

0353. *Confirm by practice.*

0354. ***Dismantling.*** *Explain and demonstrate:* If the tester has been operating from an external power supply, disconnect the power supply cable and return it to the lid of the tester. The dismantling of the equipment is then done as follows:

a. Disconnect the junction box cable from the test socket on the guidance pack and reconnect to the junction box.

b. Refit the dust cover to the test socket on the guidance electronics pack.

c. Remove the junction box from the support assembly and restow it on the working face of the tester. Secure the two straps.

d. Remove the collimator from the tracker as follows:

(1) Support the collimator with one hand.

(2) Rotate the locking ring anti-clockwise until both red marks are

together.

(3) The collimator can now be removed from the tracker.

e. Replace the collimator on the tester and secure the two straps.

f. Replace and secure the lid of the tester.

g. Replace the lens cover on the tracker.

h. Close the eyepiece cover on the tracker.

0355. *Confirm by questions and practice.*

0356. ***External Power Source.*** *Explain:* If the internal power supply is not functioning, due either to flat batteries or a fault within the battery pack, the firing post can be tested using any external power supply with an output of 21–29 volts DC.

0357. ***Making the Connections.*** *Explain and demonstrate:* Ensure that the three position switch is at 'Off', check all connections and ensure that the junction box is disconnected. Remove the external power supply cable from the lid of the tester. Ensure that the male and female connection on the cable is made, then connect the cable to the 24 volt connector on the working face. Connect the positive crocodile clip to the positive terminal and the negative crocodile clip to the negative terminal at the power supply (*see* Fig 68). Connect the junction box and switch to 'Self test'. Check the voltmeter for the correct voltage value. The 'Self testing' procedure and the subsequent firing post test can now be carried out.

0358. *Confirm by questions and practice.*

0359. ***Serviceability Inspection.*** *Explain the servicing schedule at Annex E.*

Conclusion

0360. ***End of Lesson Drill.***

a. *Confirm the complete lesson.*

b. *Pack kit.*

Fig 63. — The Unit Tester Mk 1

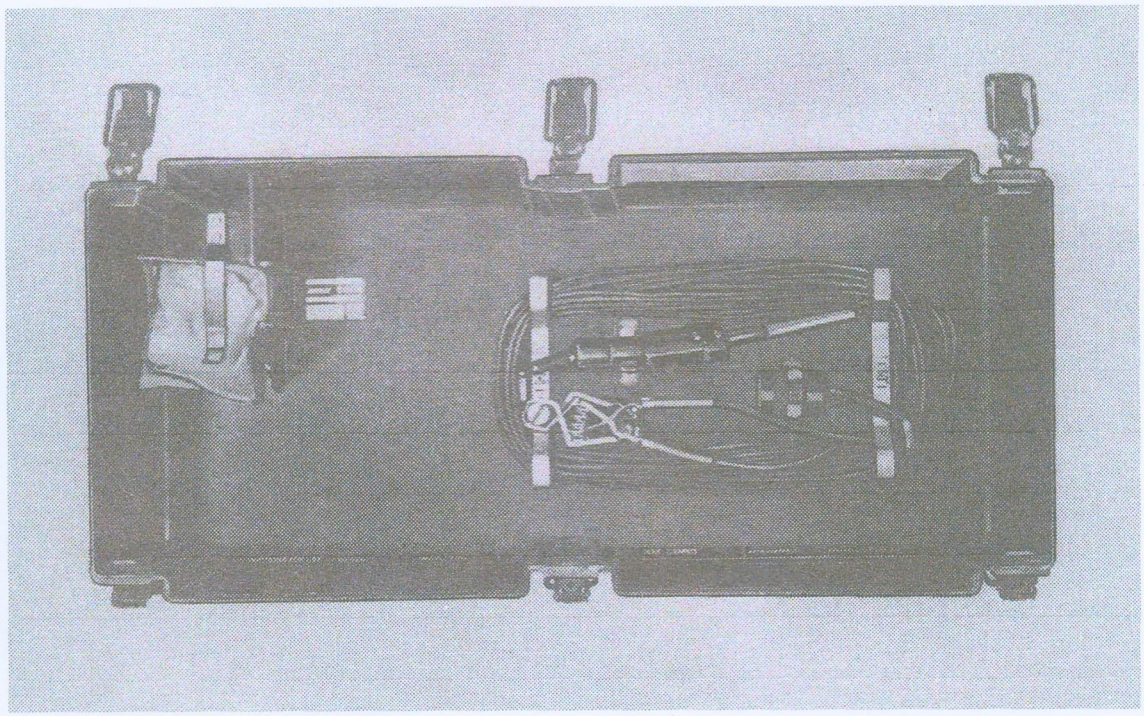

Fig 64. — The Lid, Interior

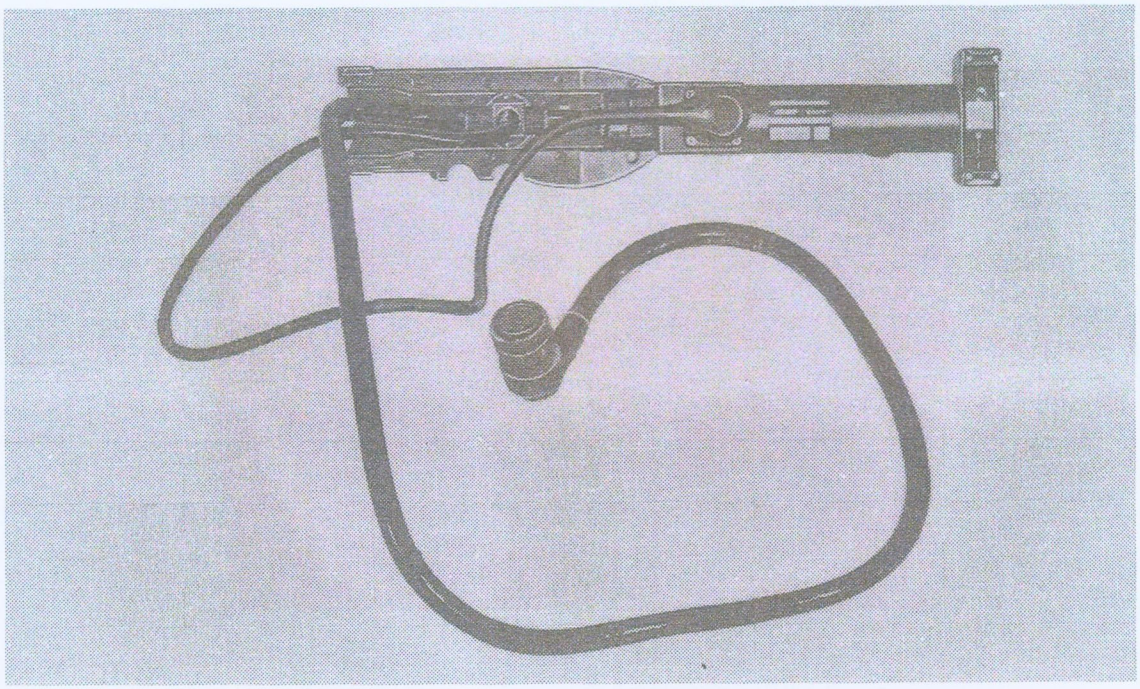

Fig 65. — The Junction Box

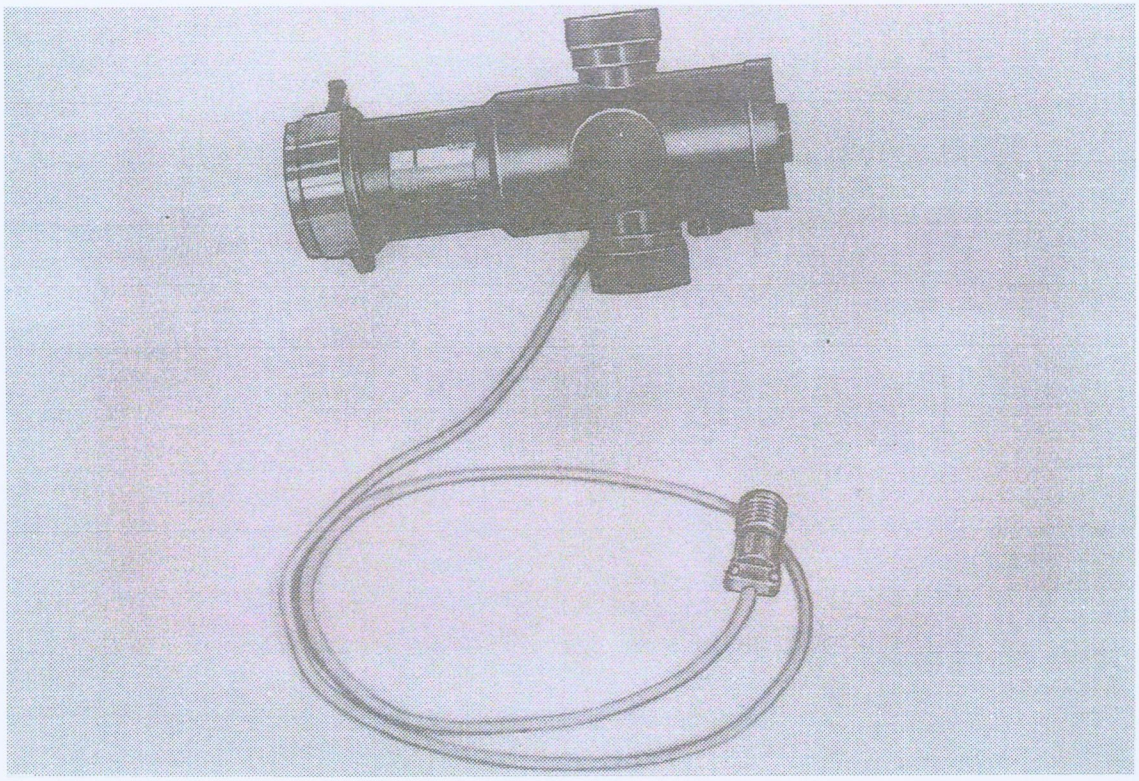

Fig 66. — The Collimator

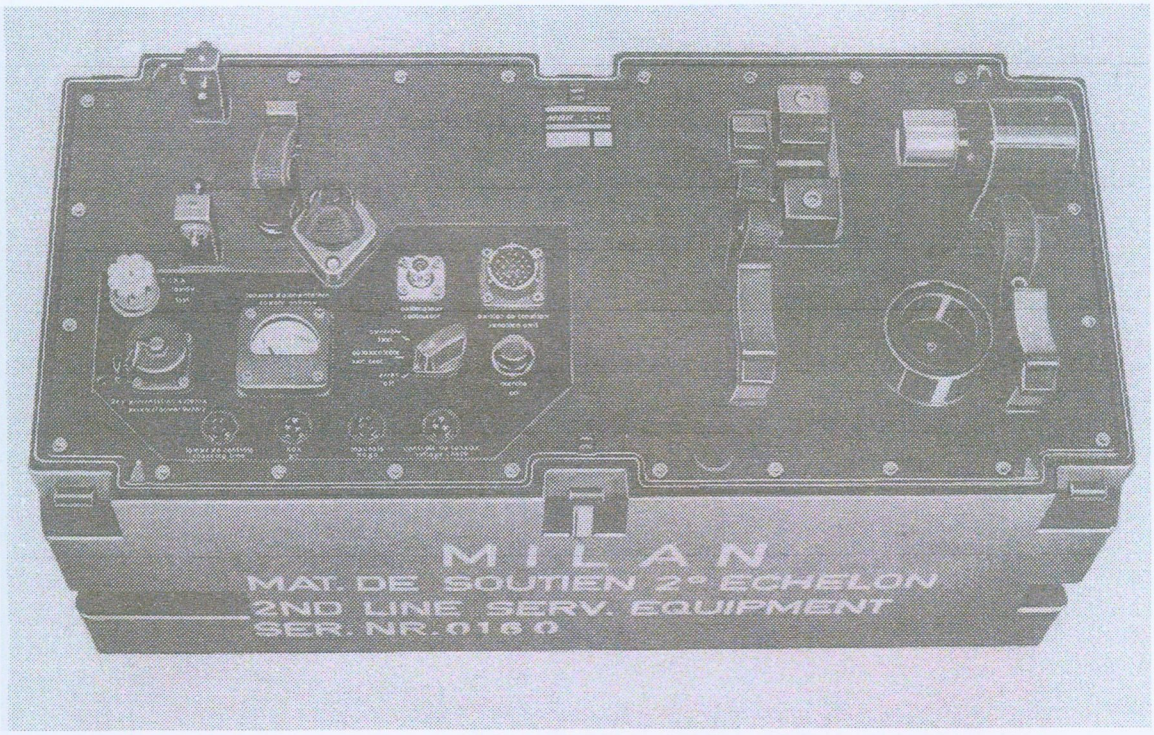

Fig 67. — The Body

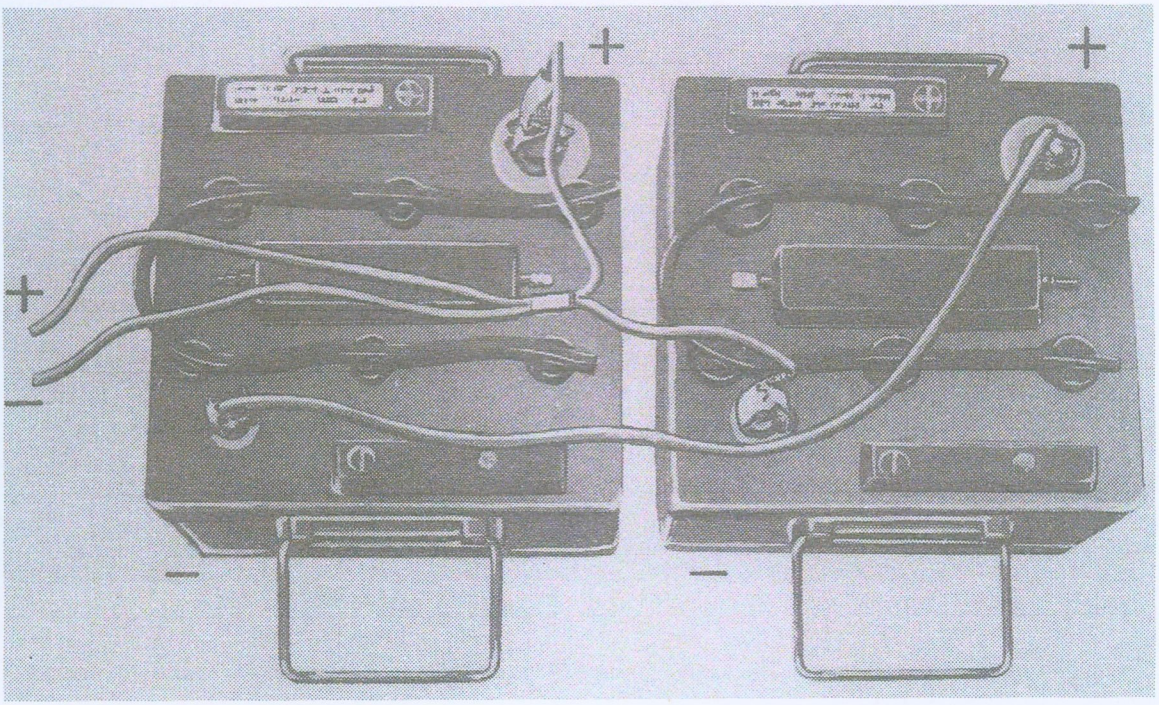

Fig 68. — External Power Source Connections

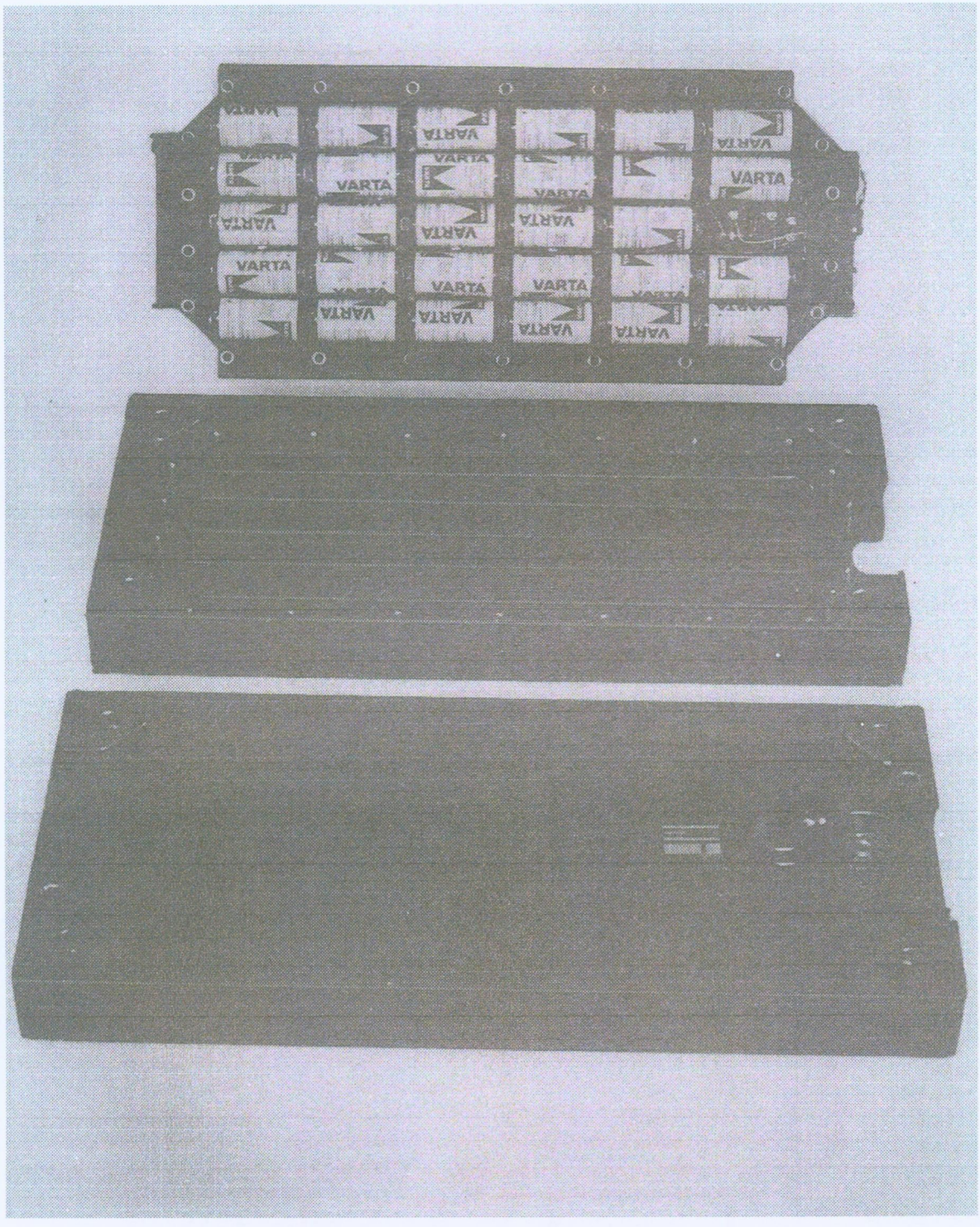

Fig 69. — The Battery Pack

c. *Summarize the main points.*

d. *Stress the importance of carrying out the firing post test correctly and the occasions when it is to be carried out.*

LESSON 14. — UNIT TESTER MK 2

A. INSTRUCTOR'S NOTES

0361. ***Aim.*** *To teach the unit tester and its uses.*

0362. ***Timings.*** *Two 40 minute periods.*

0363. ***Method.*** *A basic instructional indoor lesson.*

0364. ***Stores.***

One firing post
One unit tester
Two charged 12 volt batteries
One shorting strip
One torch

0365. ***Preparation.*** *Firing post set up. Seating arranged for the squad. Unit tester to hand. Remainder of stores out of sight. Ensure that the unit tester batteries are charged and that the two 12 volt batteries are connected by the shorting strip.*

B. CONDUCT OF THE LESSON

Introduction

0366. *Explain:* The unit tester enables an operator to check that the firing post is functioning correctly without firing. Also, should either the unit tester or firing post fail to operate correctly it provides a means of isolating the fault. The procedure for this, however, will only be carried out by qualified REME technicians. It is important that each member of the MILAN anti-tank platoon knows how to carry out the test of the firing post, so that in action a faulty firing post may be replaced quickly.

Unit Tester

0367. ***Characteristics.*** *Explain and demonstrate:* The unit tester is a compact portable unit. It is robust in construction and weighs 30 kilogrammes. Its function is to provide the team with a simple 'Go/No go' indication of the combat readiness of the firing post. The tester will operate from any external power supply between 22 and 27 volts DC, but if this is not available it is equipped with its own power supply.

The tester will operate in extreme climatic conditions although the internal power supply is adversely affected by conditions of extreme cold.

0368. ***Description.*** *Explain and demonstrate:* The tester (*see* Fig 70) is housed within a case equipped with two fold away handles for ease of carriage. Stencilled on the lid and both sides of the body are the words MILAN, the NATO stock number, the maker's drawing number, the maker's part number and the tester serial number. The complete equipment may be divided into five main assemblies as follows:

a. The lid and accessories.

b. The junction box.

c. The collimator.

d. The body.

e. The battery pack.

0369. *Confirm by questions.*

Detailed Description

0370. ***The Lid*** (*see* Fig 71). *Explain and demonstrate:* The lid is designed to protect the working face and the components housed on it. Made of moulded plastic it is secured to the body by six quick release catches. The edge of the lid is designed to ensure an efficient seal when fitted to the body. Stored inside the lid are the external power supply cable, the guidance electronics cable and a plastic accessory pack containing: ten lens cloths, two fast melting ten amp fuses, an extractor (for the collimator diaphragm (*see* Annex E)) and a short-circuiting plug for REME use. Contained within a plastic bag is a cable for recharging the batteries without them having to be removed from the battery pack. A white mark on the outside of the lid corresponds to a similar mark on the body and ensures correct fitting of the lid. A small partition inside the lid prevents it from fitting onto the body if the junction box is not correctly positioned on the working face.

0371. *Confirm by questions.*

0372. ***The Junction Box*** (*see* Fig 72). *Explain and demonstrate:* The junction box is attached to the body of the tester by means of locking devices similar to those on the support assembly. It is held in place by two straps fitted with quick release catches. To remove the junction box, release the straps, depress the latch and pull the junction box to the rear. Externally the junction box on the unit tester resembles the junction box fitted to the ammunition tube and will fit onto the support assembly in the same way. On top of the junction box there are three sockets. The two smaller ones are fitments for the guidance electronics cable which is used by

REME. The larger one is used during the self test phase to house the plug on the shorter cable that comes from the rear of the junction box. During the firing post test this plug is connected to the test socket on the guidance electronics pack. The plug on the longer of the two cables connects to a socket on the working face of the tester.

0373. *Confirm by questions.*

0374. ***The Collimator*** (*see* Fig 73). *Explain and demonstrate:* The collimator is supported on the working face by three brackets and secured by two straps. To remove the collimator, undo the two straps and lift it clear. To remove the plug from the working face, pull the outer sleeve of the plug up and it will disengage from the socket on the working face. To replace the plug, align the cut away part of the plug with the corresponding part on the socket. Apply a little downward pressure on the plug and at the same time force the outer sleeve down. The plug is correctly fitted when an orange ring is visible above the outer sleeve. The collimator has a cylindrical body. At one end are located the optical system and the locking ring which enables the collimator to be attached to the lens of the tracker. At the other end are located the focussing ring, which incorporates a diaphragm, through the centre of which is an aperture, two adjustment knobs for elevation and azimuth and a cable which connects to the socket on the tester. During the self test, the collimator remains on the working face and when testing the firing post it is secured to the tracker.

0375. *Confirm by questions and practice.*

0376. ***The Body*** (*see* Fig 74). *Explain and demonstrate:* The casing is made of light alloy and is designed to protect the operating module which is housed inside the body. On the top of the body is the working face which is bordered by a rubber insert.This enables a watertight seal to be made between the lid and the body. There are also six locating studs which ensure correct fitting of the lid to the body. The layout of the working face is as follows:

a. Rubber insert.

b. Locating studs.

c. Junction box male connection.

d. Junction box supporting bracket and strap.

e. Junction box locking devices and strap.

f. Collimator brackets and straps.

g. Junction box socket.

h. Collimator socket.

i. Selector switch 1.

j. Selector switch 2.

k. 'On' button.

l. Warm up lamp.

m. Check timing indicator.

n. 'No go' indicator.

o. 'Go' indicator.

p. Voltmeter with luminous display.

q. External power supply socket.

r. 10 amp fuse.

s. The following are fitted for REME use:

(1) Reticle illumination lamp.

(2) Reticle illumination button.

(3) Firing generator cable.

(4) Two sockets for external test equipment.

0377. ***Body/Battery Pack Connection.*** *Explain and demonstrate:* On the four corners of the body are quick release catches. The unlocking of these catches enables access to the battery pack. On the underside of the body are two locating studs which engage in corresponding holes in the battery pack to ensure correct fitting.A two pin socket also on the underside of the body connects with two electrical terminals on the battery pack to form the link between the battery pack and operating module.

0378. ***The Battery Pack*** (*see* Fig 76). *Explain and demonstrate:* The battery pack consists of a case and a lid which are connected together by Allen screws. Access to the Allen screws is gained from the bottom of the case. Also at the bottom of the case are four rubber shock absorbers which support the complete tester. The case provides four locking recesses that are engaged by the quick release catches on the body. Contained inside the lid are 29 nickel cadmium batteries (1.2 volts), which are rechargeable. Leaking nickel cadmium batteries pose a toxic hazard and if handled, hands must be washed. An electrical socket at the side of the lid is provided to enable the batteries to be recharged without them having to be removed from the battery pack. The two terminals on the top of the lid are to be blanked off

by the rubber plug when the body is removed from the battery pack.

0379. *Confirm by questions and practice. End the practice with the tester reassembled.*

Testing

0380. ***Self Test (Internal Supply).*** *Explain and demonstrate:* Before carrying out the electrical test of the firing post, a self test must always be completed. This will ensure that the tester is working correctly. The procedure for the self test is as follows:

a. Remove the tester lid.

b. Check that the selector switch 1 is at the 'Off' position (fully anti-clockwise).

c. Release the two straps securing the junction box, push the junction box fully forward into the male socket and check that it is locked correctly by the locking devices.

d. Check that the two plugs on the junction box electrical cables are secured to their respective sockets.

e. Check that the plug on the collimator electrical cable is correctly connected to its socket on the working face.

f. Turn selector switch 1 to 'Self test' (first position clockwise).

g. Turn selector switch 2 to 'Firing post' (fully anti-clockwise).

h. Press the 'On' button.

i. Check that the warm up lamp lights.

j. Check the voltmeter as follows:

(1) If using the internal supply, that the pointer is in the green zone.

(2) If using the external supply, that the pointer is in the blue zone.

(3) If the pointer is in the red zone it indicates that the external power supply is too high.

k. After approximately 30 seconds, check that the warm up lamp goes out and the check timing indicator lights.

l. After approximately 12 seconds, check that the check timing indicator

goes out and the 'Go' indicator lights.

m. If the tester has indicated 'Go' then it is ready for use.

n. Switch off.

o. If the tester has reacted in any other way than above, the procedure is to be repeated.

p. If a 'No go' result is obtained again, the tester is to be checked by unit REME.

q. Timings for the warm up lamp and check timing indicator will vary according to temperature and power supply state.

0381. *Confirm by practice.*

0382. ***Testing the Firing Post.*** *Explain and demonstrate:* To ensure that the firing post will function correctly when required to do so, it is necessary to test the firing post on the following occasions:

a. Before range firings.

b. Before deployment on operations (including Concentration/Assembly Area).

c. Daily on operations when the tactical situation permits.

d. Immediately following a period of storage.

e. Immediately following a long period of transit.

f. If a misfire occurs as in Lesson 11.

g. Every three months.

h. Whenever the electrical operation of the firing post is in doubt.

0383. ***The Electrical Test of the Firing Post.*** *Explain and demonstrate:* When the electrical test of the firing post is carried out, the complete electronic and optical functions are checked. The procedure for carrying out the test is as follows:

a. Check that selector switch 1 is at 'Off'.

b. Check that the Day/Night switch on the guidance electronics pack is positioned at 'Day' and check that the electrical connection tracker/guidance electronics pack is fitted correctly.

c. Remove the junction box from the tester and lock it onto the support

assembly in the same way as an ammunition tube.

d. Remove the plug from the top of the junction box and connect it to the test socket on the guidance electronics pack.

e. Remove the lens cover from the tracker and fit the collimator as follows:

(1) Ensure that the mating faces of the tracker lens and collimator are free from distortion and free from grease. Rotate the collimator locking ring until the two red marks are together.

(2) Position the collimator on the tracker by engaging the locating stud at the bottom of the lens into the recess at the bottom of the collimator. Do not turn the collimator body.

(3) Ensure that the collimator is central and rotate the locking ring clockwise until it is secure.

(4) Force is not to be used at any stage when fitting the collimator.

f. Open the eyepiece cover on the tracker.

g. Focus the collimator by using the focussing ring until the sharpest possible image of the reticle and green spot is obtained.

h. Using the elevation and azimuth adjusting knobs centralize the green spot onto the centre of the cross hairs of the reticle. In poor light conditions, it may be necessary to shine a torch into the firer's eyepiece to provide illumination to carry out the procedures at sub paragraphs **g.** and **h.**

i. Turn selector switch 1 to 'Test' (second position clockwise).

j. Check that selector switch 2 is at 'Firing post'.

k. Press the 'On' button and check that the warm up lamp lights.

l. Check the voltmeter.

m. Wait approximately 30 seconds and check that the warm up lamp goes out and the check timing indicator lights.

n. Within 30 seconds move the safety flap to 'Fire' and press the firing button.The safety flap must remain at 'Fire' throughout the test.

o. Wait approximately 15 seconds and check that the check timing indicator goes out and the 'Go' light comes on.

p. If the tester has indicated 'Go', the firing post is ready for use.

q. Switch off.

r. If the tester has reacted in any other way than above, the procedure is to be repeated.

s. If a 'No go' result is obtained again, the firing post is to be checked by unit REME.

0384. *Confirm by practice.*

0385. ***Dismantling.*** *Explain and demonstrate:* If the tester has been operating from an external power supply, disconnect the power supply cable and return it to the lid of the tester. To dismantle the equipment:

a. Disconnect the junction box cable from the test socket on the guidance electronics pack and reconnect it to the junction box.

b. Refit the blanking plug to the test socket on the guidance electronics pack.

c. Remove the junction box from the support assembly and replace it on the working face on the tester. Secure the two straps.

d. Remove the collimator from the tracker as follows:

(1) Support the collimator with one hand.

(2) Rotate the locking ring anti-clockwise until both red marks are together.

(3) The collimator can now be removed from the tracker.

e. Replace the collimator on the tester and secure the two straps.

f. Replace and secure the lid of the tester.

g. Replace the lens cover on the tracker.

h. Close the eyepiece cover on the tracker.

0386. *Confirm by questions and practice.*

0387. ***External Power Source.*** *Explain:* If the internal power supply is not functioning, due either to flat batteries or a fault within the battery pack, the firing post can be tested using any external power supply with an output of 22–27 volts DC.

0388. ***Making the Connection.*** *Explain and demonstrate:* Ensure that selector switch 1 is at 'Off', check all connections and ensure that the junction box is disconnected. Remove the external power supply cable from the lid of the tester. Ensure that the male and female connection on the cable is made, then connect the cable to the 24 volt connector on the working face.Connect the positive crocodile clip to the positive terminal and the negative crocodile clip to the negative terminal at the power supply (*see* Fig 75). Set selector switch 1 to 'Self test' and press the 'On' button. Check the voltmeter for correct voltage reading.The warm up lamp should go out after approximately 30 seconds. The self testing procedure and the subsequent firing post test can now be carried out.

0389. *Confirm by questions and practice.*

0390. ***Serviceability Inspection.*** *Explain the servicing schedule at Annex E.*

Conclusion

0391. ***End of Lesson Drill.***

a. *Confirm the complete lesson.*

b. *Pack kit.*

Fig 70. — The Unit Tester Mk 2

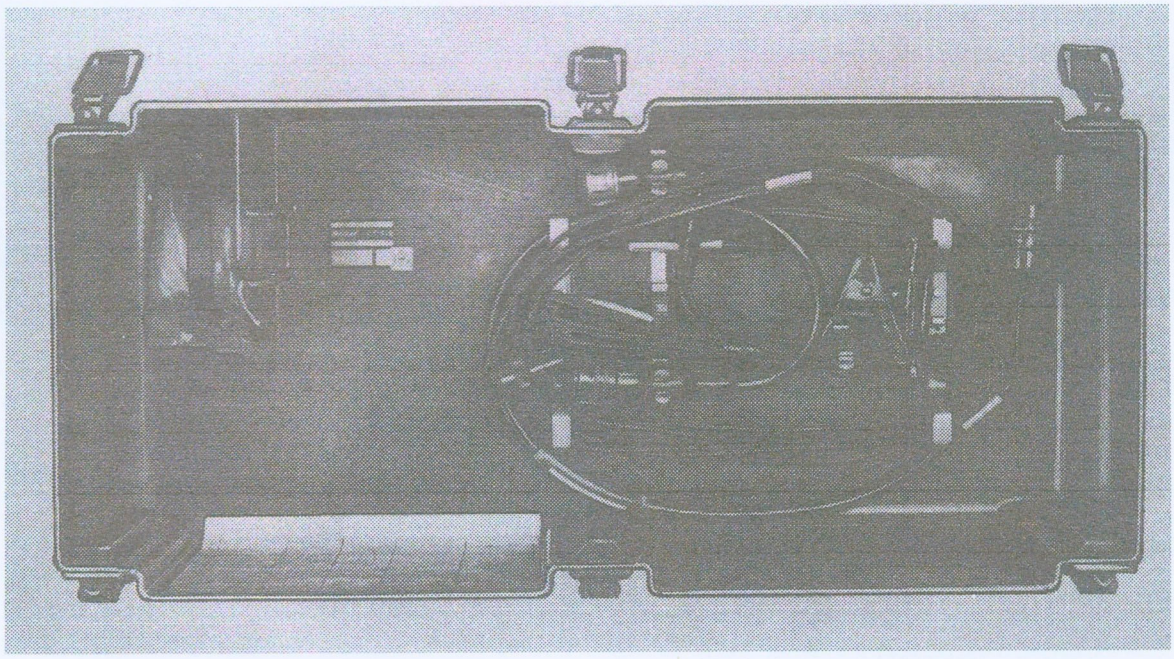

Fig 71. — The Lid, Interior

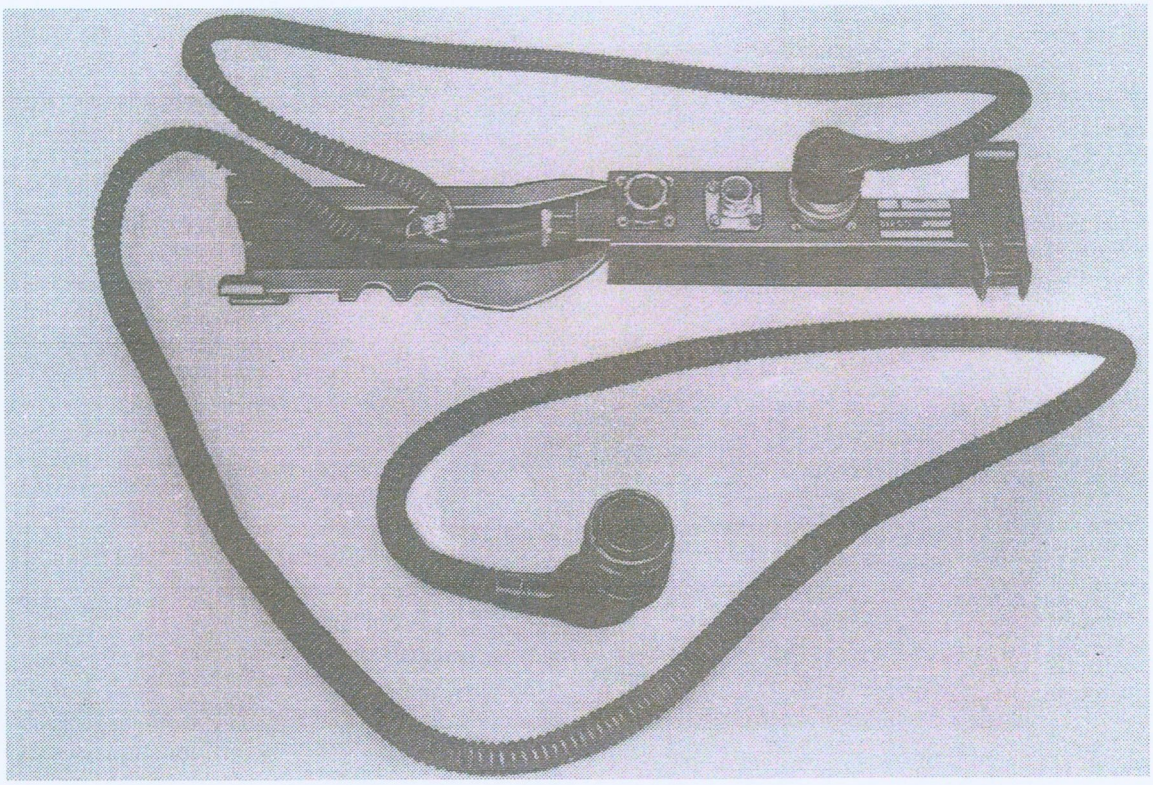

Fig 72. — The Junction Box

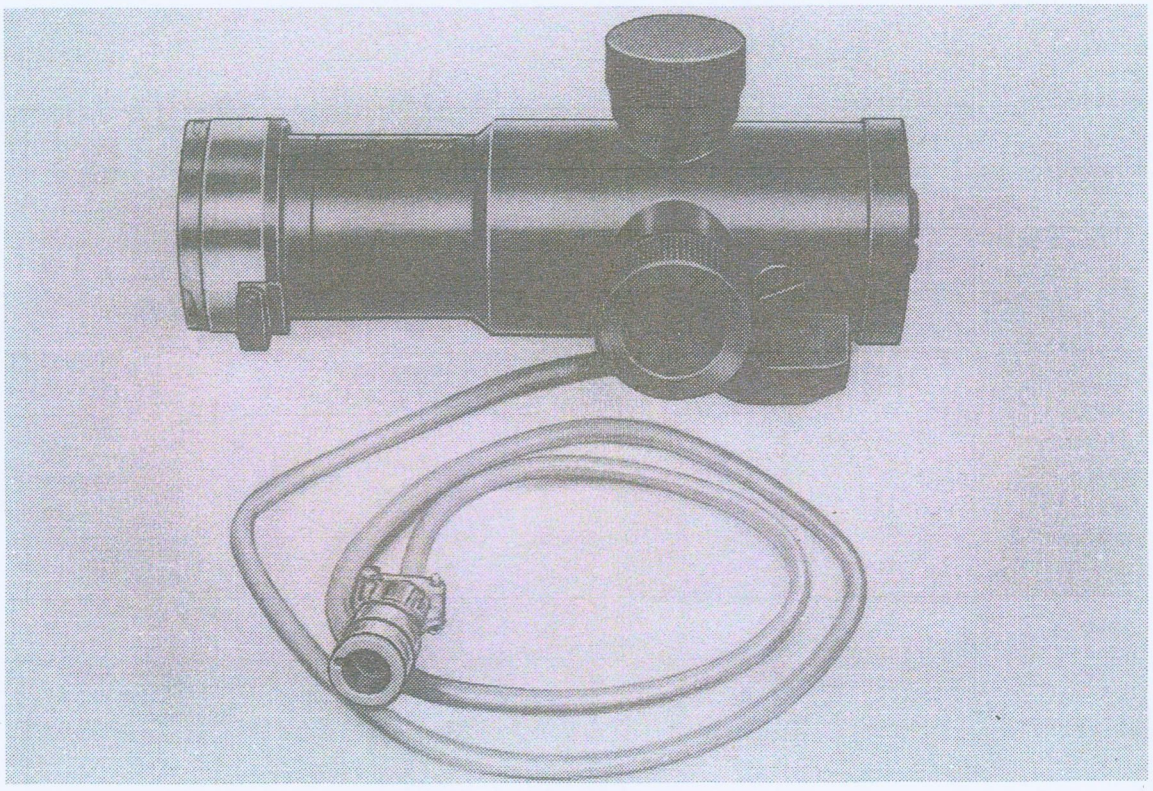

Fig 73. — The Collimator

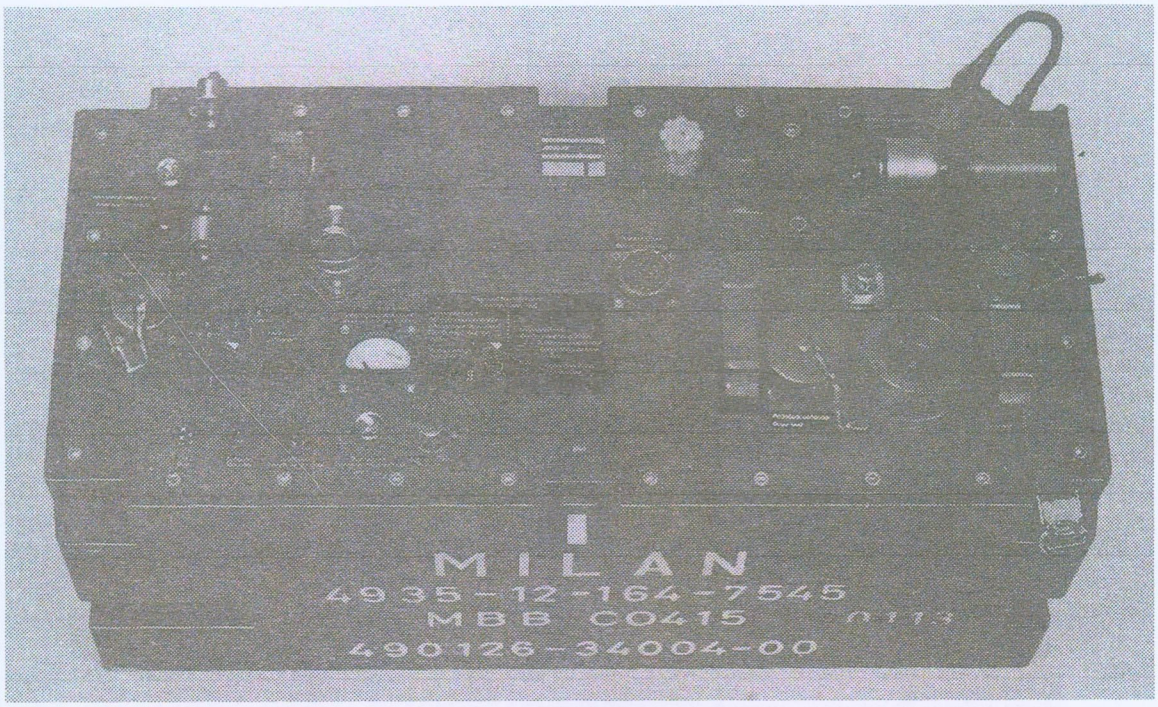

Fig 74. — The Body

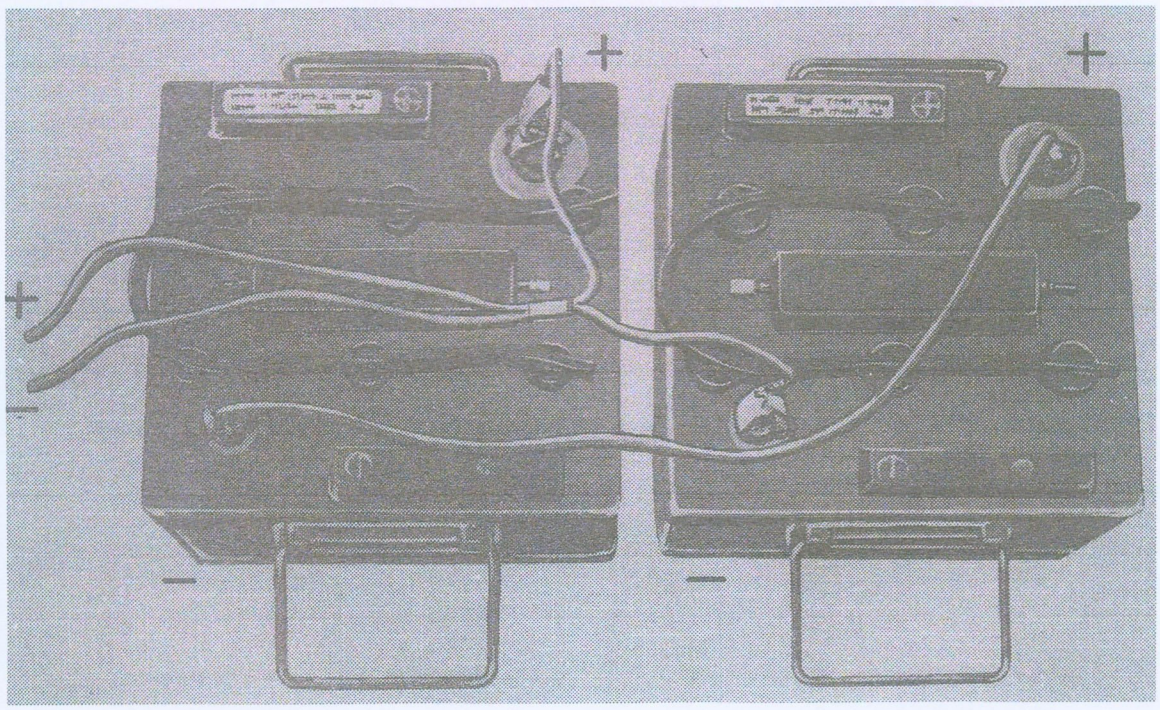

Fig 75. — External Power Source Connections

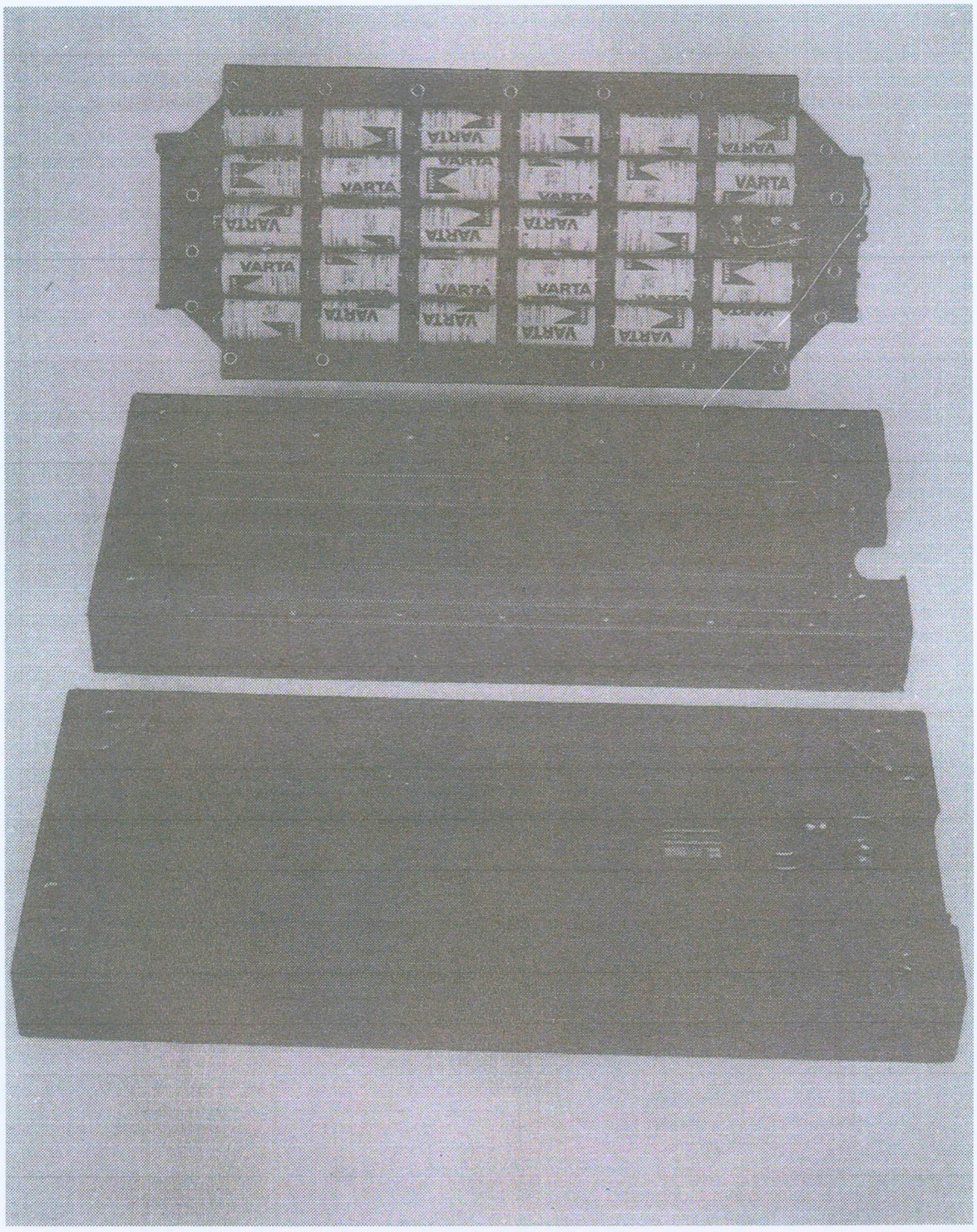

Fig 76. — The Battery Pack

c. *Summarize the main points.*

d. *Stress the importance of carrying out the firing post test correctly and the occasions when it is to be carried out.*

LESSON 15. — HARMONIZATION

A. INSTRUCTOR'S NOTES

0392. ***Aim.*** *To teach:*

a. *How to check the harmonization of the tracker and the support assembly axes.*

b. *How to adjust the harmonization.*

0393. ***Timings.*** *Two 40 minute periods.*

0394. ***Method.*** *A basic instructional indoor lesson (see Miscellaneous).*

0395. ***Stores.***

Two firing posts
One sighting gauge complete
Harmonizing target
50 metre tape
Adjusting tools
Aids required to show the sight pictures during harmonization

0396. ***Preparation.*** *Firing posts set up. Seating arranged for the squad. Remainder of the stores and aids out of sight until required. The instructor should ensure that one firing post is out of harmonization.*

0397. ***Miscellaneous.*** *A flat piece of ground at least 50 metres in length is required for this lesson, with a distant view of at least 1000 metres which includes a prominent DAP. If this is not possible from indoors, the lesson is to be taken outdoors.*

B. CONDUCT OF THE LESSON

Introduction

0398. *Explain:* Before firing it is essential that the axes of the tracker and the support assembly are parallel. If these axes are not parallel it is possible that guidance will not take place because the missile would be launched outside the goniometer's 80 mil sensing field.

Equipment

0399. *Explain and demonstrate:* The harmonization equipment consists of the following components:

a. The harmonizing target (*see* Fig 77).

b. The sighting gauge in its protective case, complete with two 50 metre corrective lenses (*see* Fig 78).

c. A 50 metre tape.

d. A set of tools for harmonization adjustment. (A detailed description of the tools will be explained later in the lesson.)

03100. ***The Harmonizing Target.*** *Explain and demonstrate:* The harmonizing target consists of a metal framework fitted with three folding legs. The legs are locked in position by means of three screw clamps. In the top of the frame is a white circular sighting zone, which is used during the harmonizing check. The black centre circle is used when making adjustments to the tracker when harmonization is not correct. On the frame and to the right of the sighting zone is a red painted square at which the sighting gauge is aimed, when checking harmonization. A levelling bubble is fitted to the frame and enables the harmonizing target to be set up correctly in the horizontal and vertical planes.

03101. *Confirm by questions.*

03102. ***The 50 Metre Tape.*** *Explain:* The 50 metre tape is used to ensure that the harmonization target is positioned at the correct distance. It consists of a metal frame which is fitted with a wooden handle and winding lever. The tape is graduated in millimetres and numbered at every centimetre and meter. At the start of the tape, a device is fitted to assist in securing the tape to the firing post.

03103. *Confirm by questions.*

03104. ***The Sighting Gauge.*** *Explain and demonstrate:* The sighting gauge container is made of a hardened plastic consisting of an upper and lower section secured by four quick release fasteners and two locating pins. On one side of the container is the serial number and stencilled in white the designation MILAN, the NATO stock number and manufacturer's detail. The inside of the container is fitted with a weatherproof seal and series of rubber mouldings to ensure correct stowage of the sighting gauge and corrective lenses. The sighting gauge consists of a body with an optical sight mounted on the top. The eyepiece protrudes to the rear of the sighting gauge and is fitted with a focussing ring. Within the sight there is a reticle consisting of an inner and outer circle and a cross hair. The image produced is inverted (*see* Fig 79). The underside of the sighting gauge is fitted with a female socket and two guide ribs, which along with a latch recess on the right of the gauge,

enable it to be secured to the support assembly in the same way as an ammunition tube (*see* Fig 80). Two 50 metre lenses are provided, these lenses are matched to the sighting gauge and are not interchangeable, the large one to fit over the lens of the tracker and the small one to screw into the forward end of the sighting gauge. These lenses are only used with the harmonizing target.

03105. *Confirm by questions.*

Harmonization

03106. ***Checking the Harmonization.*** *Explain:* Harmonization can be checked in either of two ways. The most accurate method is to use the harmonizing target but if the tactical situation prohibits the use of the target, and when visibility allows, a Distant Aiming Point (DAP) may be used.

03107. ***DAP.*** *Explain and demonstrate:*

a. Select a DAP at least 1000 metres away.

b. It is not necessary to level the firing post.

c. Attach the sighting gauge to the support assembly and ensure that it is locked. Do not fit the 50 metre lenses. Focus the sighting gauge onto the DAP.

d. By traversing and elevating the firing post, align the cross hair of the reticle in the tracker onto the DAP (*see* Fig 81).

e. Without disturbing the firing post, check that the DAP appears within the outer circle of the sighting gauge (*see* Fig 82). Check back to ensure that the reticle cross hair is still correctly laid. If this is so, harmonization is correct.

f. If the DAP does not appear within the outer circle of the sighting gauge, check the aim of the tracker reticle cross hair again. If the aim is correct, and the DAP is still not visible within the outer circle of the sighting gauge, the harmonization is not correct and must be adjusted.

03108. *Confirm by practice.*

03109. ***Harmonizing Target.*** *Explain and demonstrate:*

a. Using the 50 metre tape, erect the harmonizing target 50 metres in front of the firing post.

b. Ensure that the harmonizing target is at right angles to the firing post and, by means of the levelling bubble, upright.

c. Fit the sighting gauge to the support assembly and ensure that it is locked. Focus the sighting gauge onto the harmonization target.

d. Attach the 50 metre lenses to the sighting gauge and the tracker lens.

e. Level the firing post by laying the vertical cross hair of the sighting gauge onto a vertical member of the harmonizing target. Use the tripod legs to level the firing post (*see* Fig 83).

f. By elevating and traversing the firing post, lay the cross hair of the sighting gauge in the centre of the red square on the harmonizing target (*see* Fig 84).

g. Without disturbing the firing post, look through the eyepiece of the tracker and check that the reticle cross hair is within the white circular sighting zone (*see* Fig 85). If it is, check back to ensure that the sighting gauge is still laid correctly. If this is so, then the harmonization is correct.

h. If the reticle cross hairs are not within the white circular sighting zone, then sub paragraphs **f.** and **g.** are to be repeated. If, on checking a second time, the reticle cross hairs are still not within the white circular sighting zone, the harmonization is not correct and must be adjusted.

03110. *Confirm by practice.*

Occasions for Checking the Harmonization

03111. *Explain:* Harmonization is to be checked on the following occasions:

a. Before range firings.

b. Before deployment on operations (including Concentration/Assembly Areas).

c. Daily on operations when the tactical situation permits.

d. Immediately following a period of storage.

e. Immediately following a long period of transit.

f. If on firing, the missile fails to enter the field of view.

g. Whenever harmonization of the firing post is in doubt.

03112. *Confirm by questions.*

Adjusting the Harmonization

03113. ***Tools.*** *Explain and demonstrate:* If the relationship between the tracker and support assembly has been checked and found to be incorrect, harmoniza-

tion must be adjusted using the harmonizing target and the following additional equipment:

a. Torque wrenches, hexagonal and ring spanner.

b. Spanner 'C' type.

c. Spanner (OJDE) 7 x 8 mm A/F Open Jawed Double Ended.

d. Allen key 2 mm A/F.

e. Spanner combination 13 mm.

f. Allen key 6 mm A/F.

03114. ***Bolts.*** *Explain and demonstrate:* Only two of the three bolts securing the tracker to the support assembly are used when adjusting the harmonization. Bolt 1 located at the front of the tracker is not used when making adjustments. Bolt 2 at the top of the tracker is used for adjustments in azimuth and Bolt 3, located at the bottom of the tracker is used for making adjustments in vertical alignment and elevation (*see* Fig 86).

03115. *Confirm by questions.*

03116. ***Use of Tools.*** *Explain and demonstrate:* Bolts 2 and 3 each have a circular adjuster which has holes around its circumference to enable the spanner, C type to be used when necessary. In addition both bolts have flats to which the spanner OJDE 7 x 8 mm A/F fits, to enable lock nuts, located at the end of the bolts, to be operated without disturbing any previously set adjustment (*see* Fig 87). Bolt 2's lock nut is operated by the Allen key 6 mm A/F, but is finally locked with the hexagonal attachment to the torque wrench. Bolt 3's lock nut is operated by the spanner combination 13 mm and finally locked with the ring spanner attachment. Bolt 3 is also fitted with two elevation adjusters, which enable changes in elevation to be made, using the Allen key 2 mm A/F (*see* Fig 88).

03117. *Confirm by questions.*

Procedures

03118. ***Preparation.*** *Explain and demonstrate:* Before adjustments can be made to harmonization, the equipment must be prepared as in paragraph 03109 sub paragraphs **a.–e.**

03119. *Confirm by practice.*

03120. ***Adjustments.*** *Explain and demonstrate:* When the harmonization is incorrect, azimuth adjustment, if necessary, must always be carried out first.

Whenever an azimuth adjustment has been made, the vertical alignment between the tracker and support assembly must be checked before making any adjustments in elevation.

03121. *Confirm by questions.*

03122. ***Azimuth Adjustment.*** *Explain and demonstrate:* When azimuth adjustment is correct the vertical cross hair in the field of view of the eyepiece must pass through the black centre circle on the harmonizing target. The procedure for making an azimuth adjustment is as follows:

a. By elevating and traversing the firing post, lay the cross hair of the sighting gauge in the centre of the red painted square on the harmonizing target.

b. Look through the tracker and check the position of the vertical cross hair in relation to the black centre circle on the harmonizing target.

c. Hold Bolt 2's 'flats' secure with the spanner OJDE 7 x 8 mm A/F, unlock the lock nut (*see* Fig 89).

d. Ensure that the lock nut has been unlocked far enough to enable the adjuster to be screwed along the threaded part of the bolt the estimated distance required.

e. Ensure that the 'flats' are still securely held, tighten the lock nut (hand tight only) using the Allen key 6 mm A/F. Whilst tightening the lock nut, ensure that the adjuster remains flush against the support assembly.

f. Check that the sighting gauge is still correctly laid.

g. Look through the tracker to see if the vertical cross hair now passes through the black centre circle. If it does, the azimuth adjustment is correct.

h. If it does not, repeat the procedure until correct adjustment is achieved.

03123. *Confirm by practice.*

03124. ***Vertical Alignment.*** *Explain and demonstrate:* Having made an azimuth adjustment, the vertical alignment between the tracker and support assembly must be checked as follows:

a. By elevating and traversing the firing post, check that the vertical cross hair in the sighting gauge still appears upright against a vertical member of the harmonizing target.

b. By elevating and traversing the firing post, lay the vertical cross hair in the tracker on the centre, top or bottom of either the left or right vertical member on the harmonizing target.

c. If no gap can be seen between the cross hair and the edge of the vertical member at its other end, vertical alignment is correct (*see* Fig 90).

d. If a gap can be seen, (*see* Fig 91), vertical alignment must be adjusted.

03125. *Confirm by practice.*

03126. ***Vertical Alignment Adjustment.*** *Explain and demonstrate:* If the vertical alignment between the tracker and the support assembly has been found to be incorrect, it must be adjusted as follows:

a. Unlock Bolt 3's lock nut, ensuring that the 'flats' are securely held.

b. Ensure that the lock nut has been unlocked far enough to enable the adjuster to be moved along the threaded part of the bolt the estimated distance required.

c. Slacken off the top elevation adjuster, without which Bolt 3 would not yet be free to move.

d. Screw the adjuster along the bolt until the vertical cross hair in the tracker appears upright.

e. Holding the flats secure, tighten the lock nut ensuring that the adjuster remains flush against the support assembly.

f. Tighten the top elevation adjuster.

g. The vertical alignment must now be rechecked and, if necessary, the procedure repeated.

h. Note that screwing the adjuster towards the tracker will cause the cross hair in the tracker to rotate anti-clockwise; screwing towards the support assembly will cause it to rotate clockwise.

03127. *Confirm by practice.*

03128. ***Azimuth Recheck.*** *Explain and demonstrate:* Making a vertical alignment adjustment, using Bolt 3, will disturb the azimuth harmonization and it must therefore be rechecked. Any azimuth adjustment must be made using Bolt 2. On completion recheck vertical alignment.

03129. *Confirm by practice.*

03130. ***Elevation Adjustment.*** *Explain and demonstrate:* Having corrected harmonization for azimuth and vertical alignment, elevation adjustments can now be made as follows:

a. By elevating and traversing the firing post, lay the cross hair in the sight-

ing gauge in the centre of the red painted square on the harmonizing target.

b. Check the position of the horizontal cross hair in the tracker in relation to the black centre circle on the harmonizing target. If it does not pass through the black centre circle then proceed as follows:

c. Hold Bolt 3's 'flats' secure and unlock the lock nut, taking care not to disturb the adjuster.

d. Slacken either the top or bottom elevation adjuster, depending on the adjustment required. The bottom, if elevation of the horizontal line is required and top if depression is required.

e. Take up the slack on the other elevation adjuster.

f. Tighten Bolt 3's lock nut using the spanner combination 13 mm (hand tight only), ensuring that the 'flats' are securely held.

g. Check that the sighting gauge is still correctly laid.

h. Check that the horizontal tracker cross hair now passes through the black centre circle. If it does, the elevation adjustment is correct, if it does not, repeat the procedure until correct adjustment is achieved.

03131. *Confirm by practice.*

03132. ***Completion of Adjustments.*** *Explain and demonstrate:*

a. Fully tighten all bolt lock nuts using the torque wrench and attachments, ensuring that the 'flats' are held securely. Also ensure that both elevation adjusters are tight using the Allen key 2 mm A/F.

b. This tensioning of the lock nuts and adjusters may move the cross hair away from the exact position, in the black centre circle, to which it was adjusted. For this reason, a final check must be made to ensure that the sighting gauge is still correctly laid and that the cross hair in the tracker is within the sighting zone of the harmonizing target. If it is not the procedure must be repeated. If it is, harmonization is correct.

03133. *Confirm by practice.*

03134. ***Torque Wrench.*** *Explain:* The final tightening of bolt lock nuts is to be carried out using the torque wrenches.

Dismantling

03135. *Explain and demonstrate:* On completion of the harmonizing check and

adjustment, collect the harmonizing target. Remove the 50 metre lenses and the sighting gauge and stow all components in the protective case.

03136. *Confirm by practice.*

Servicing

03137. *Explain:* A servicing schedule for harmonization equipment is at Annex E.

Conclusion

03138. ***End of Lesson Drill.***

a. *Confirm the complete lesson.*

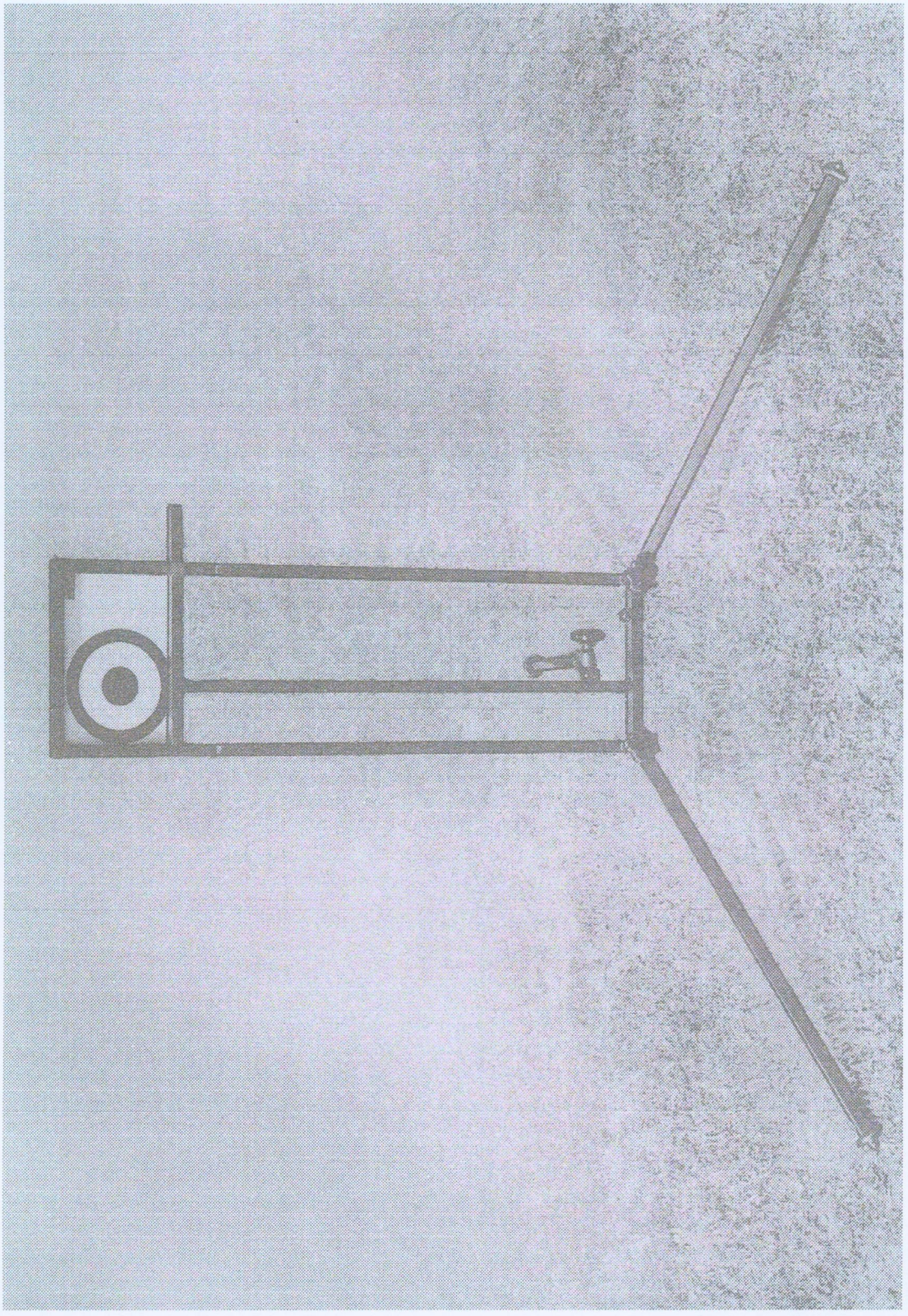

Fig 77. — The Harmonizing Target

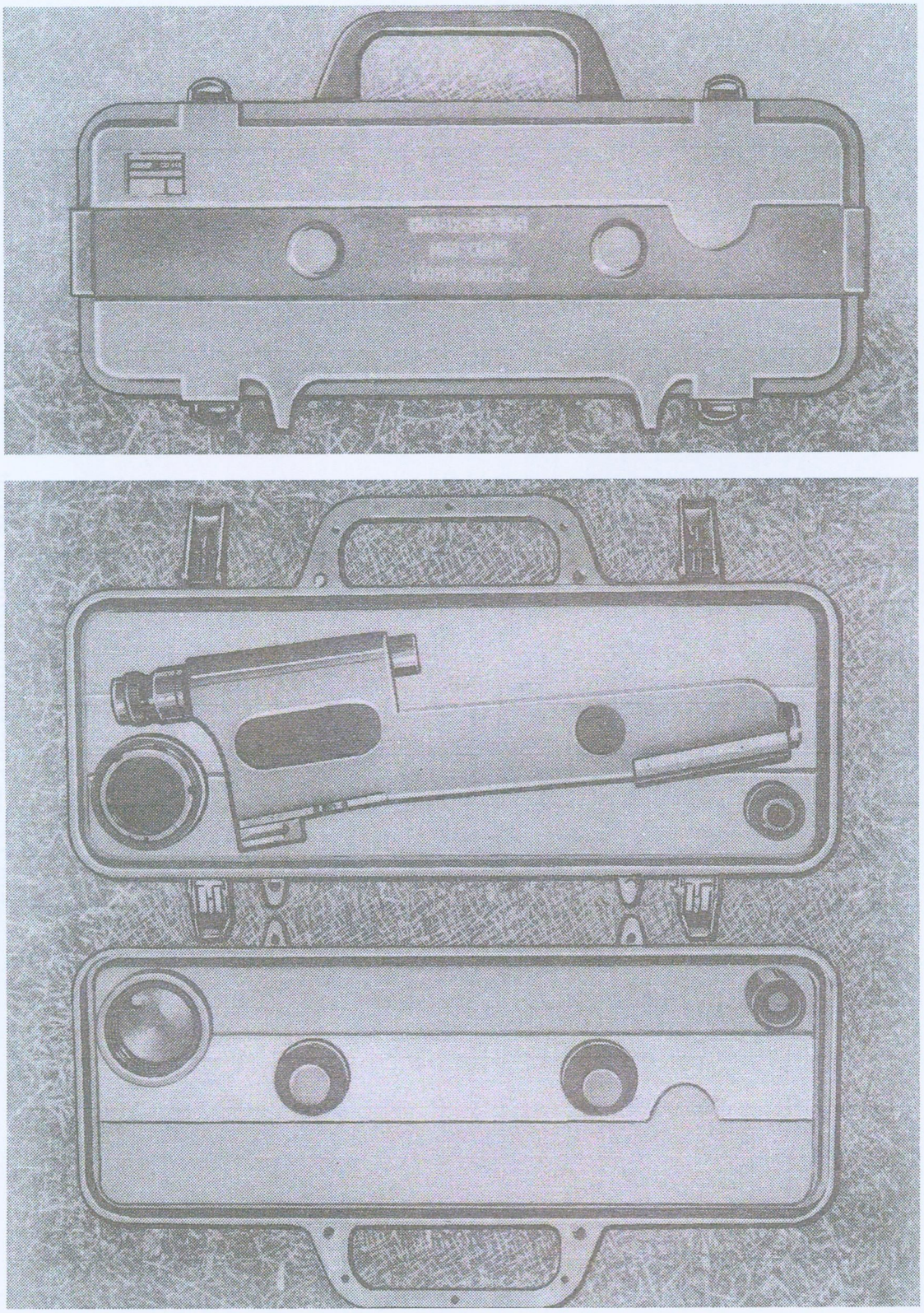

Fig 78. — The Sighting Gauge and Case

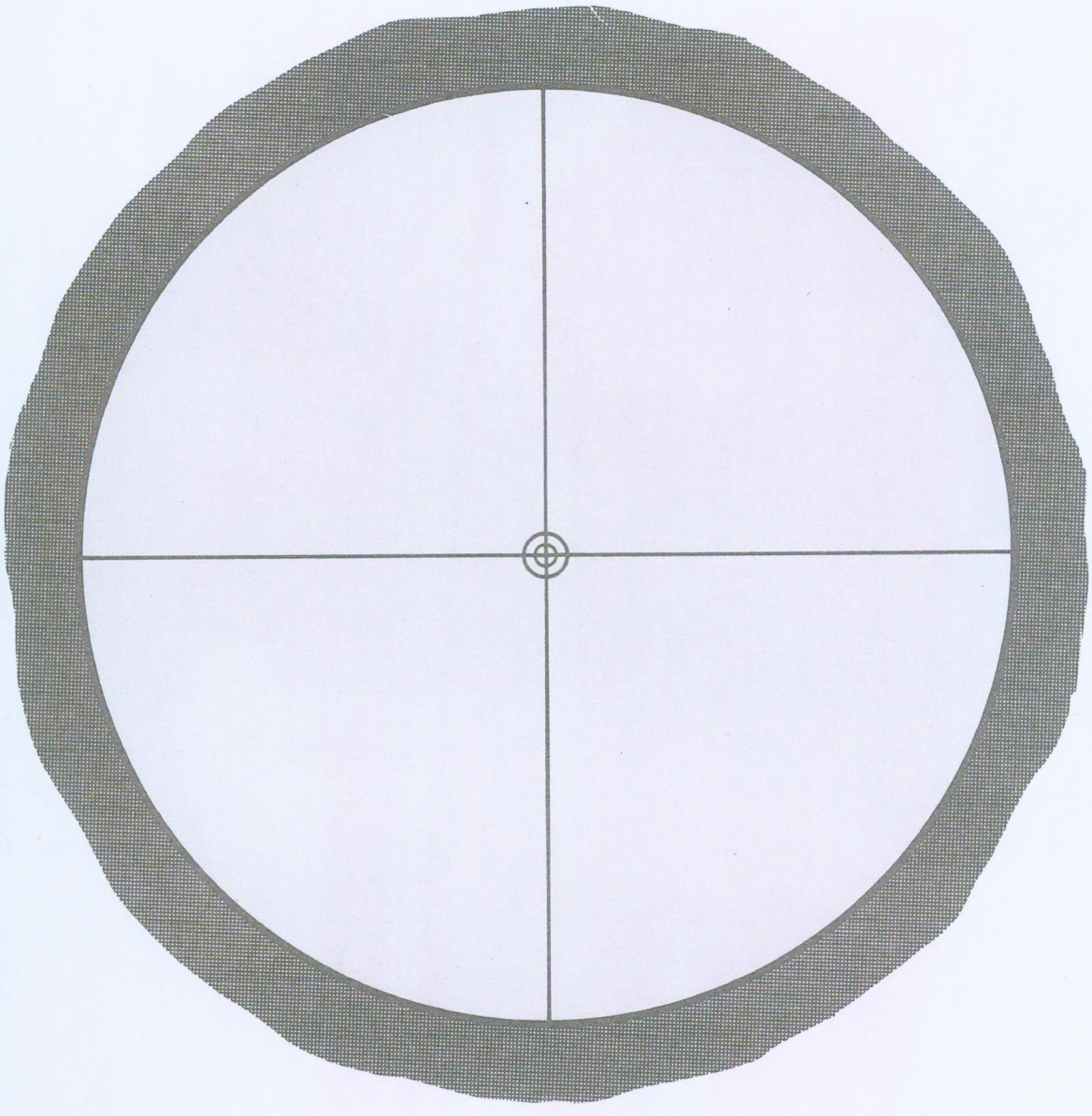

Fig 79. — Sighting Gauge Reticle

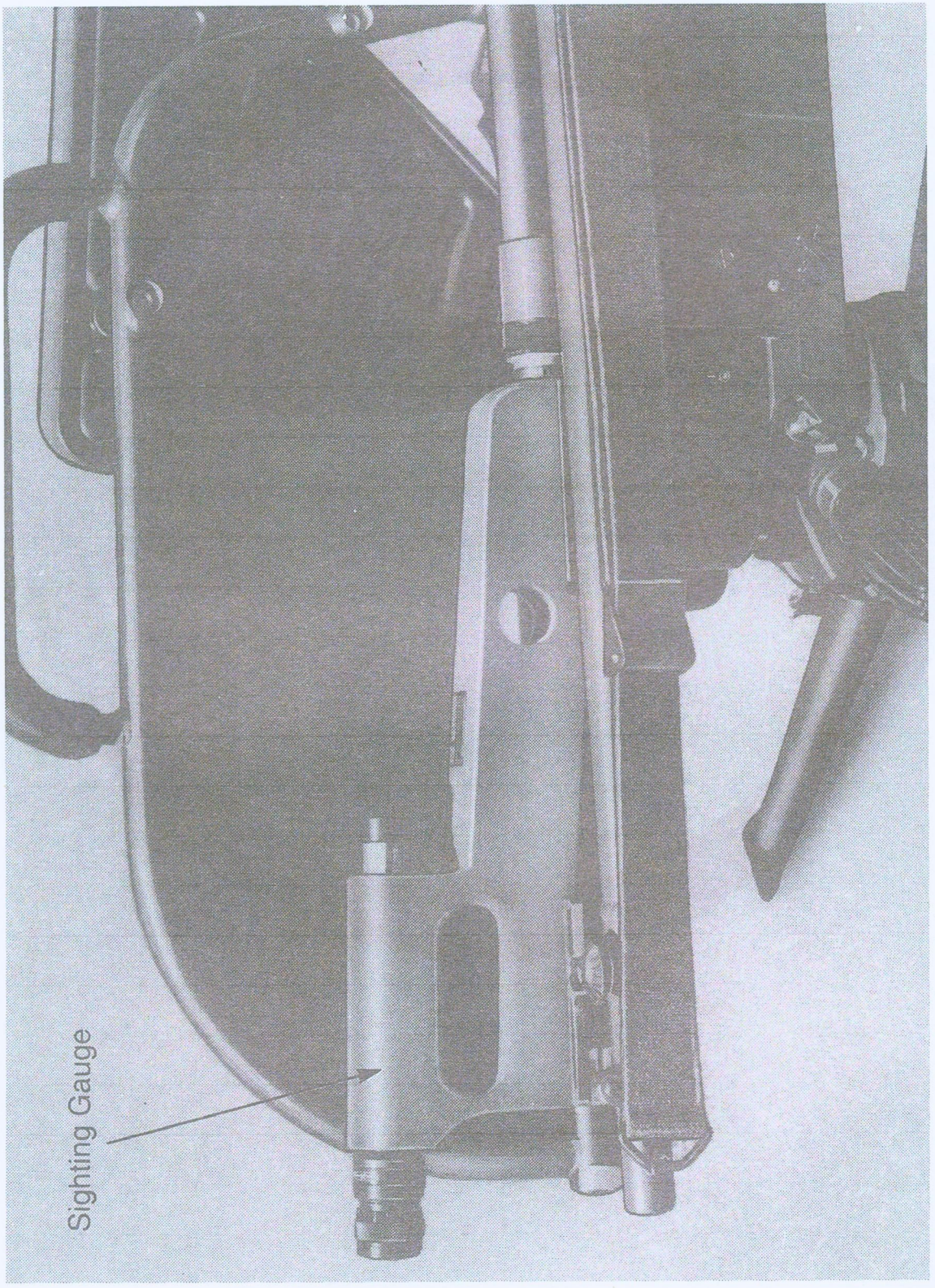

Fig 80. — Sighting Gauge Fitted

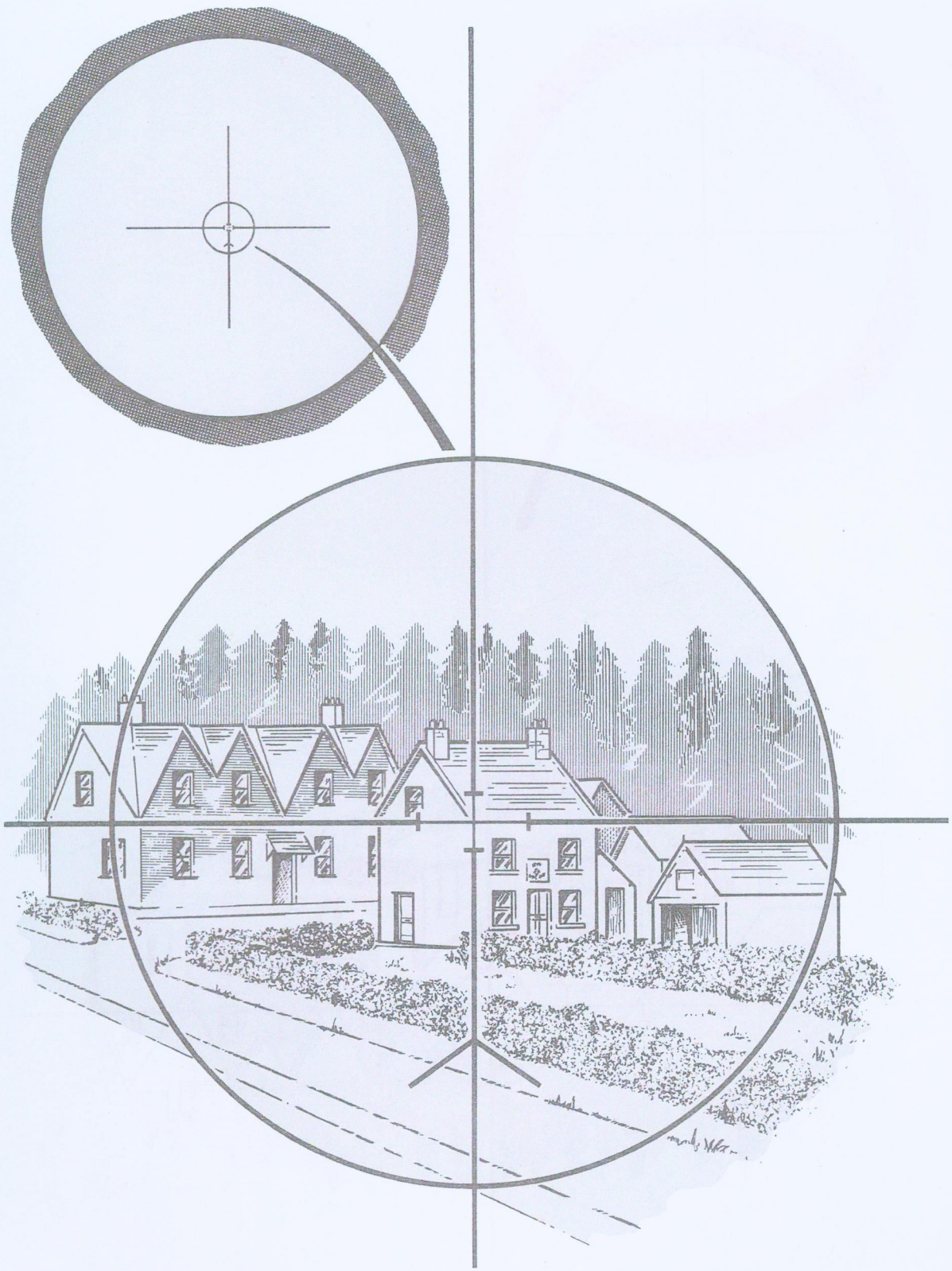

Fig 81. — Tracker/DAP

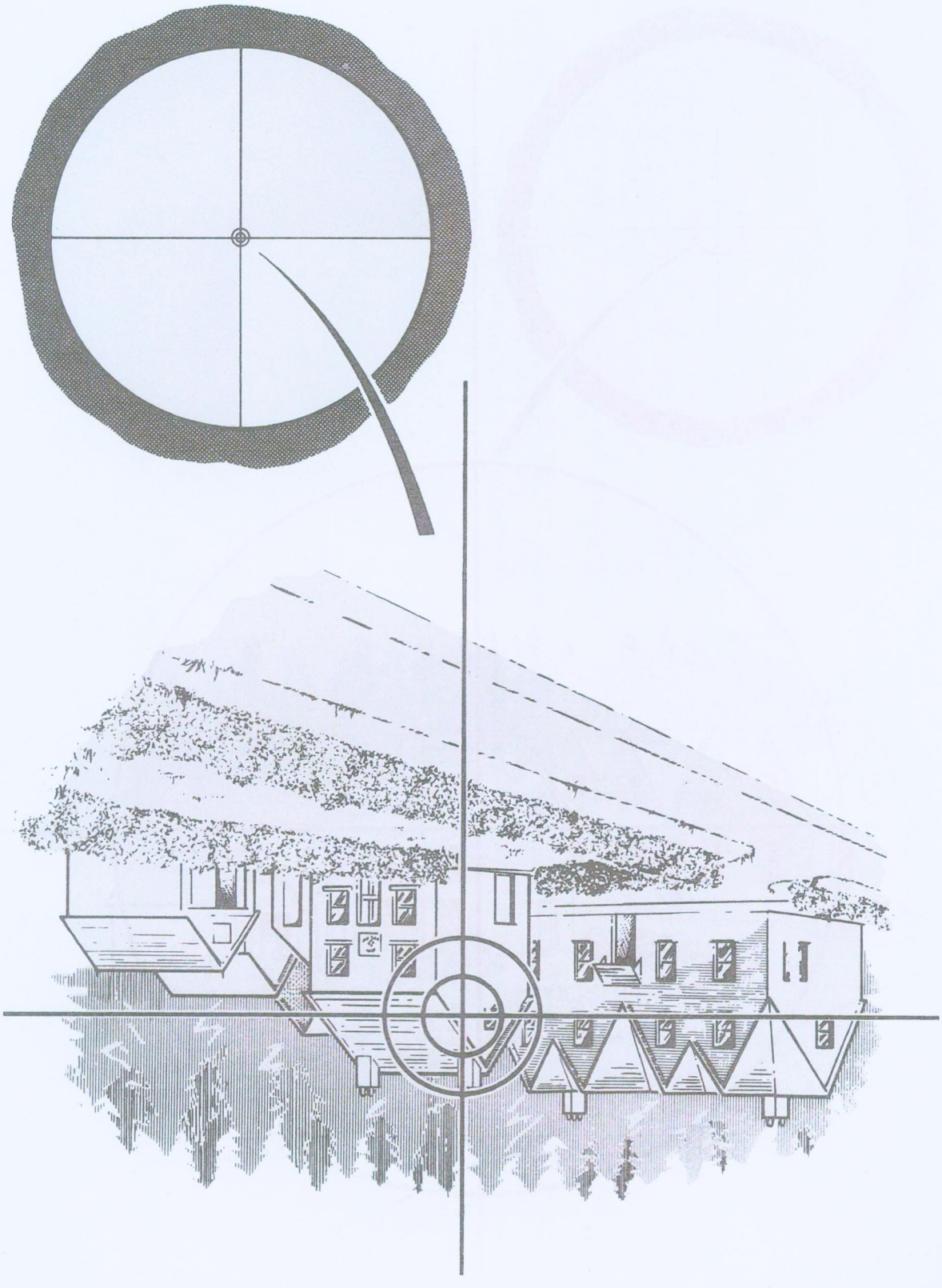

Fig 82. — Sighting Gauge/DAP

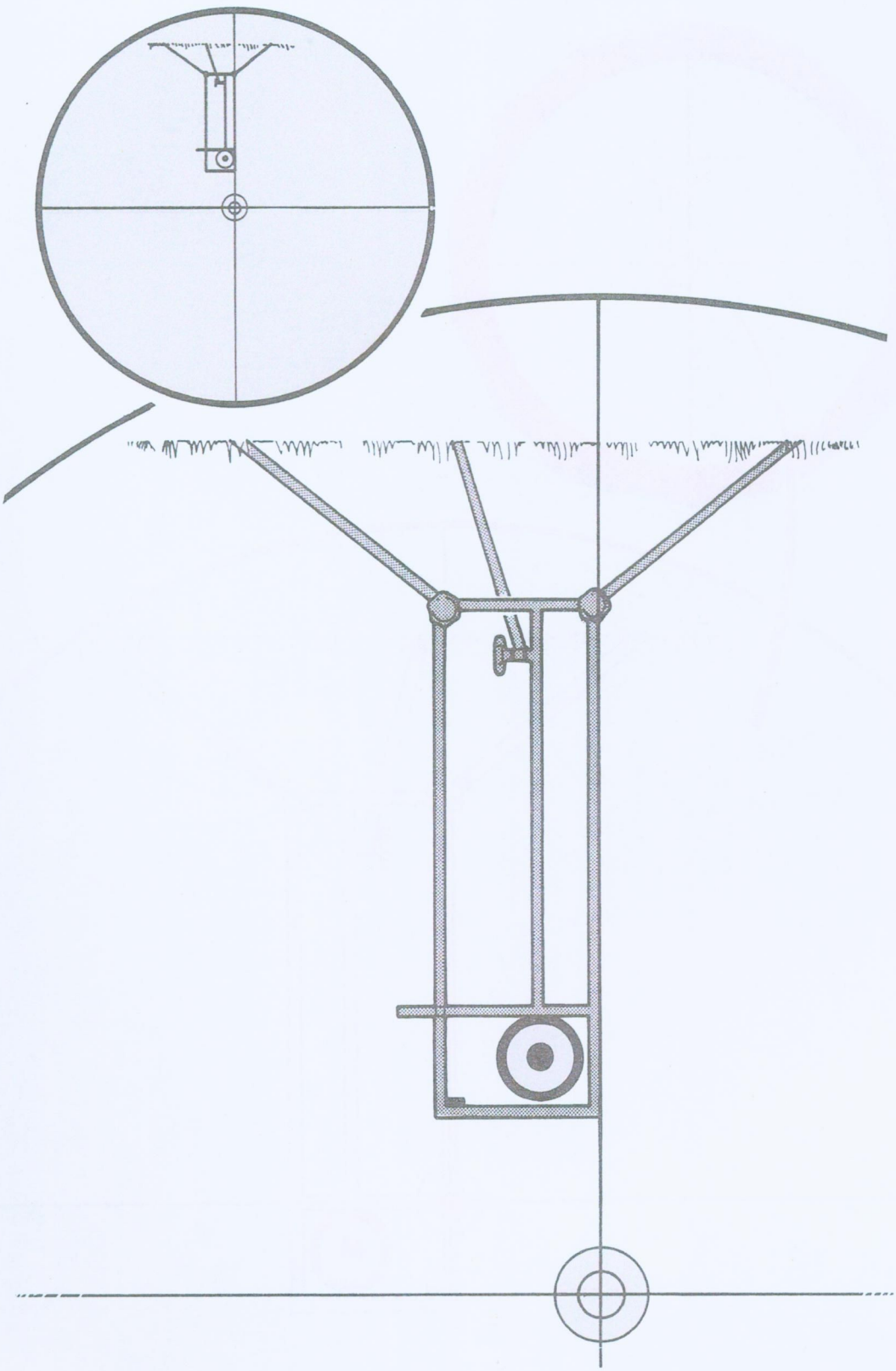

Fig 83. — Checking Firing Post Upright Through Sighting Gauge

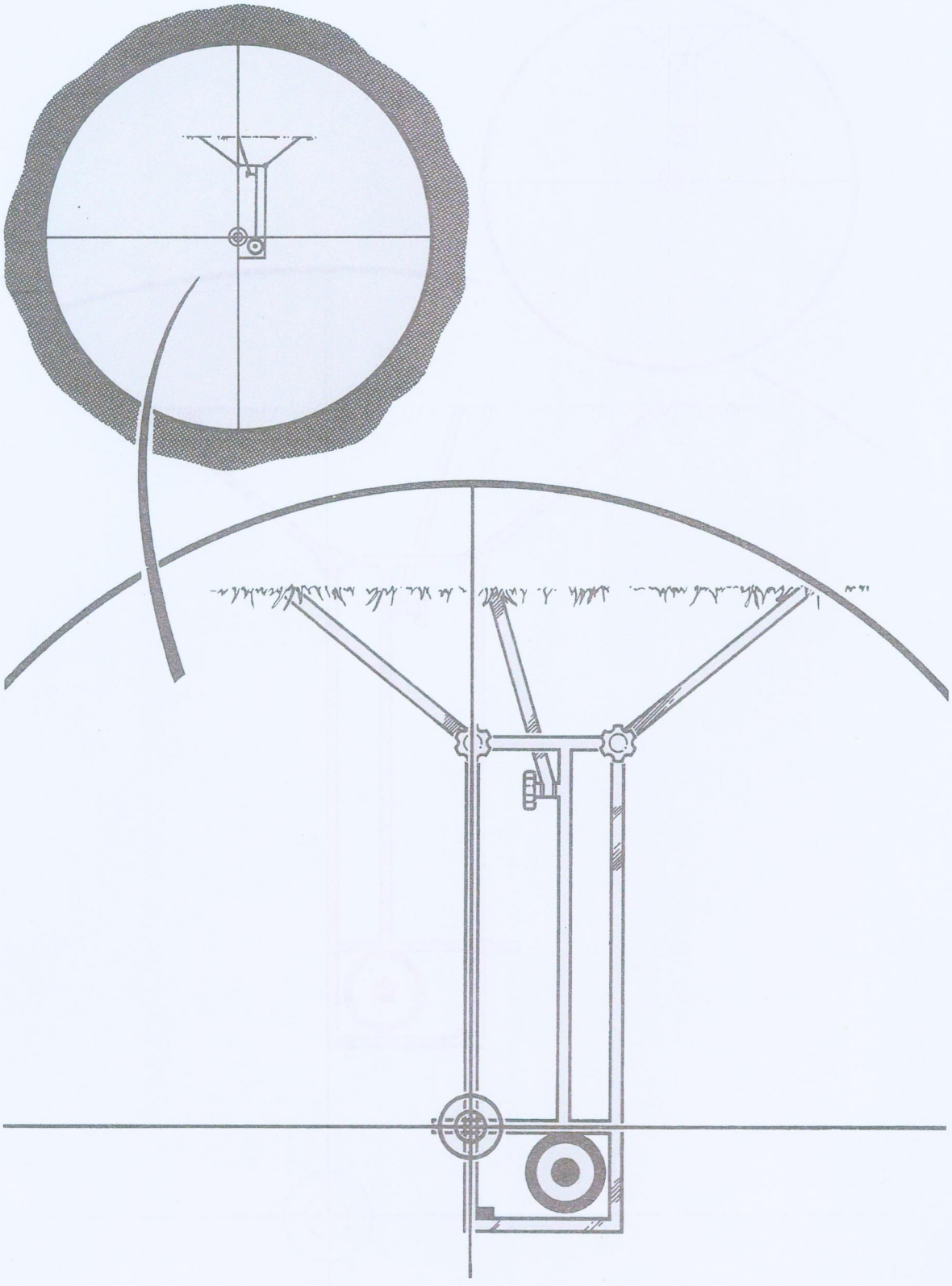

Fig 84. — Sighting Gauge/Harmonizing Target

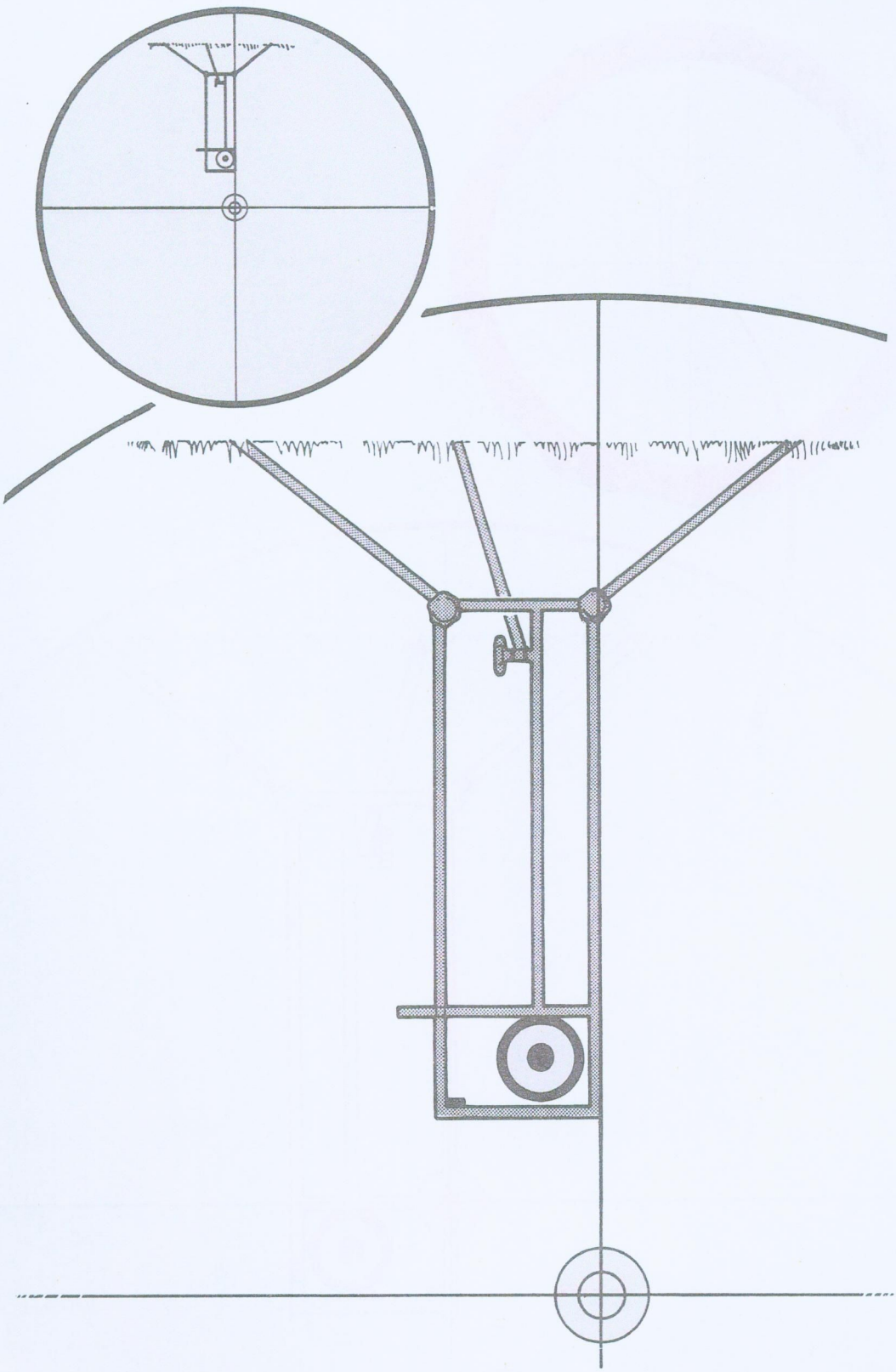

Fig 83. — Checking Firing Post Upright Through Sighting Gauge

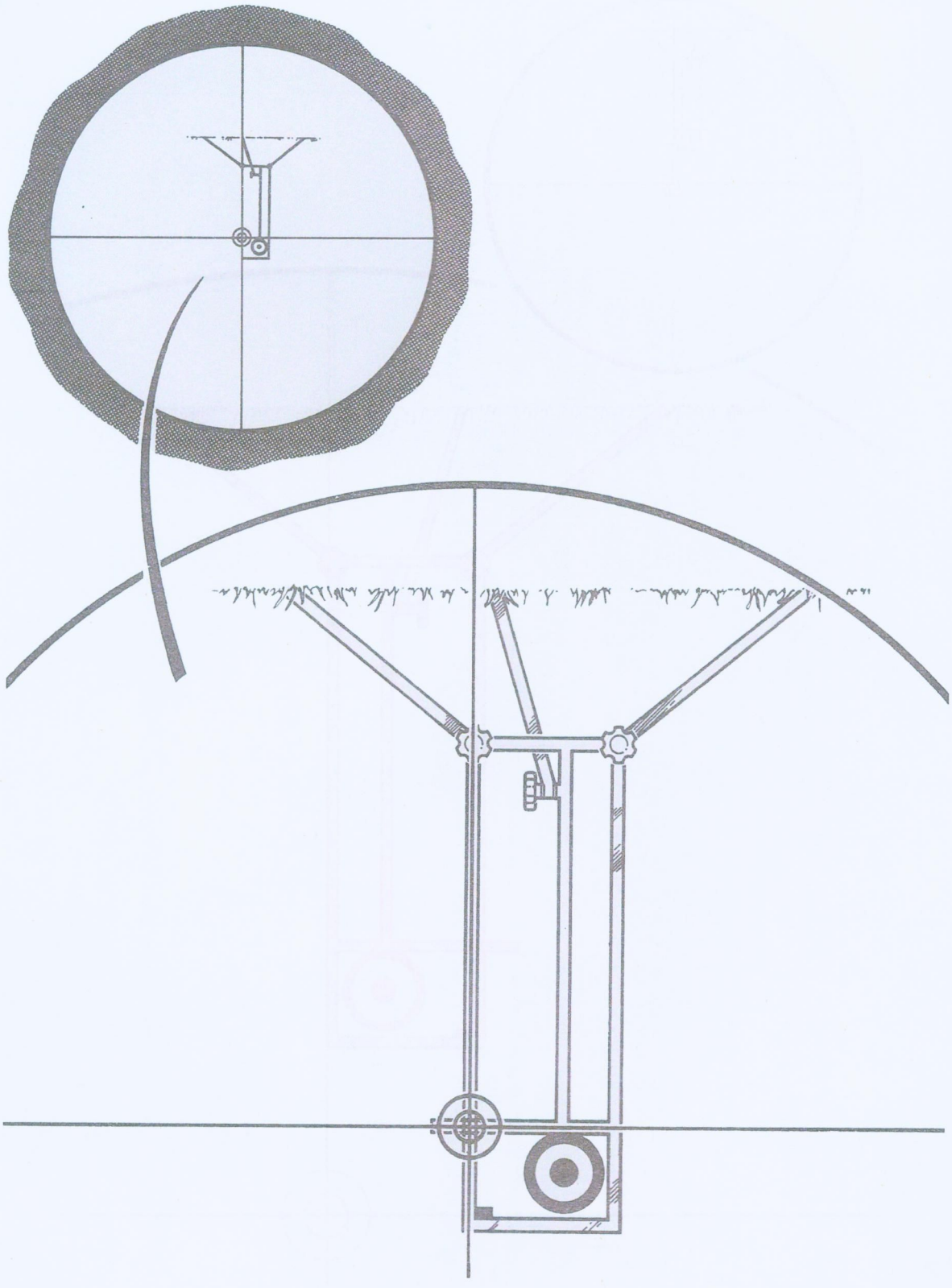

Fig 84. — Sighting Gauge/Harmonizing Target

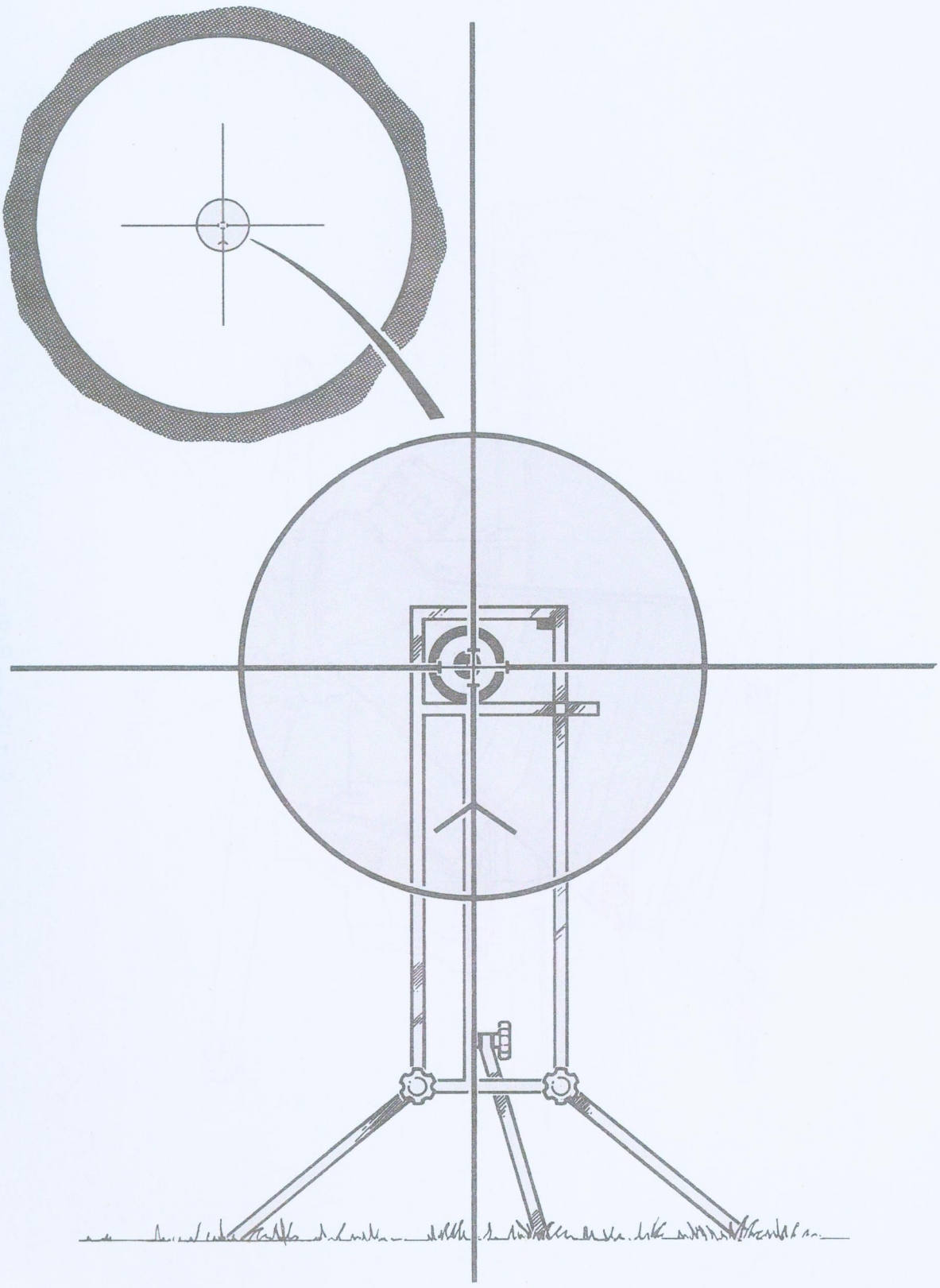

Fig 85. — Tracker/Harmonizing Target

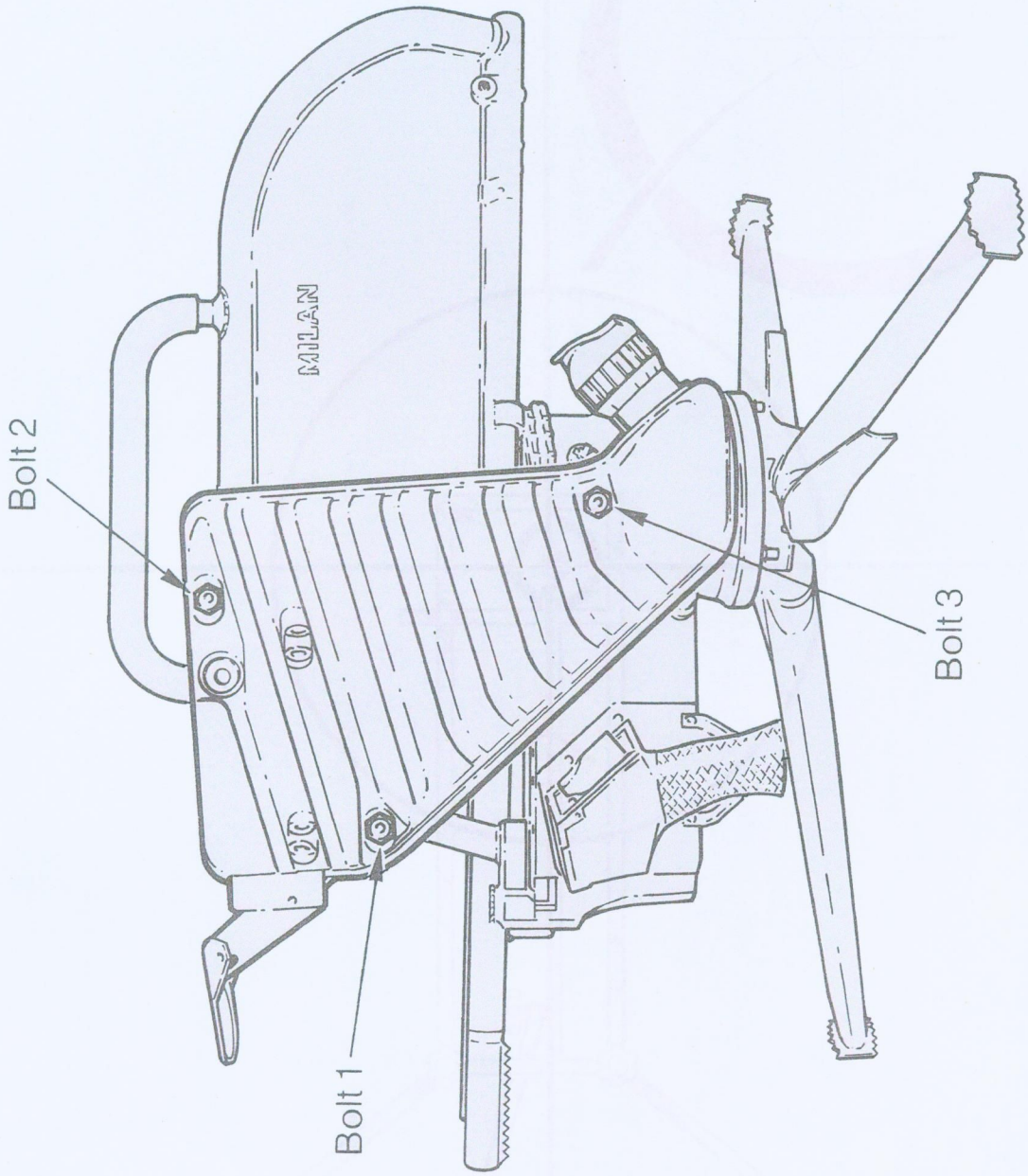

Fig 86. — Bolts

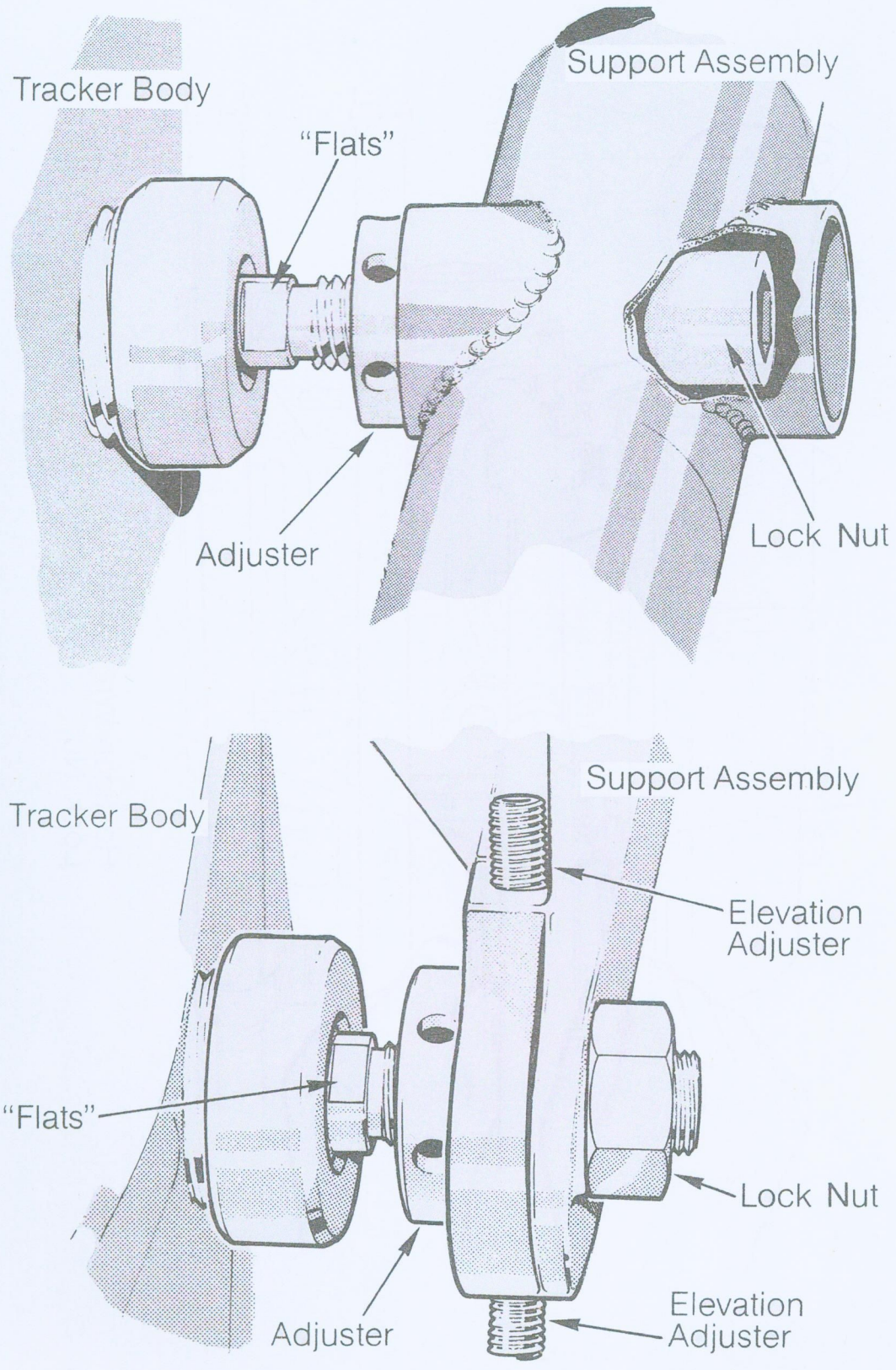
Tracker Body
"Flats"
Support Assembly
Adjuster
Lock Nut
Tracker Body
Support Assembly
Elevation
Adjuster
"Flats"
Lock Nut
Adjuster
Elevation
Adjuster

Fig 88. — Bolt 3

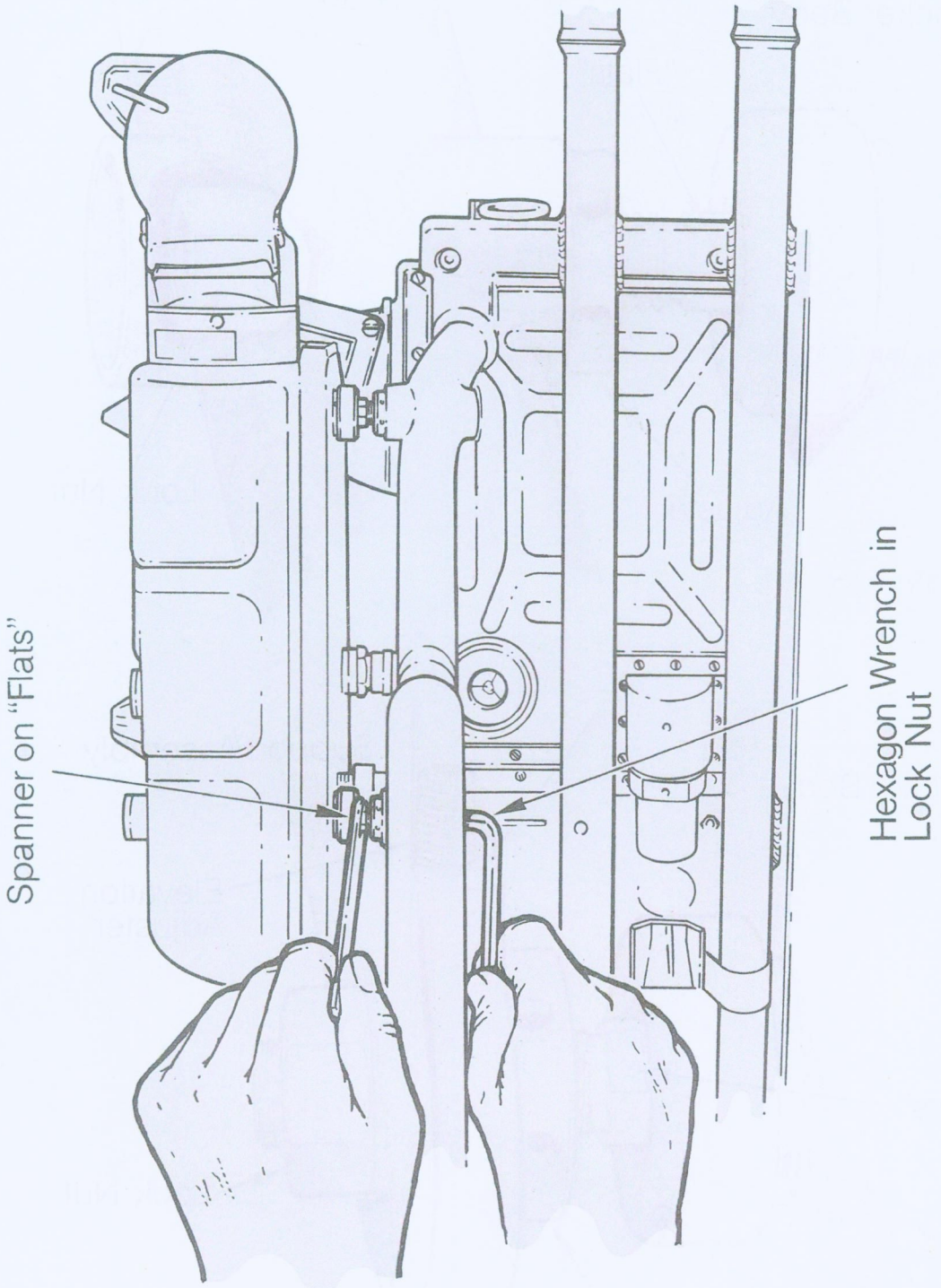

Fig 89. — Bolt 2, Use of Tools

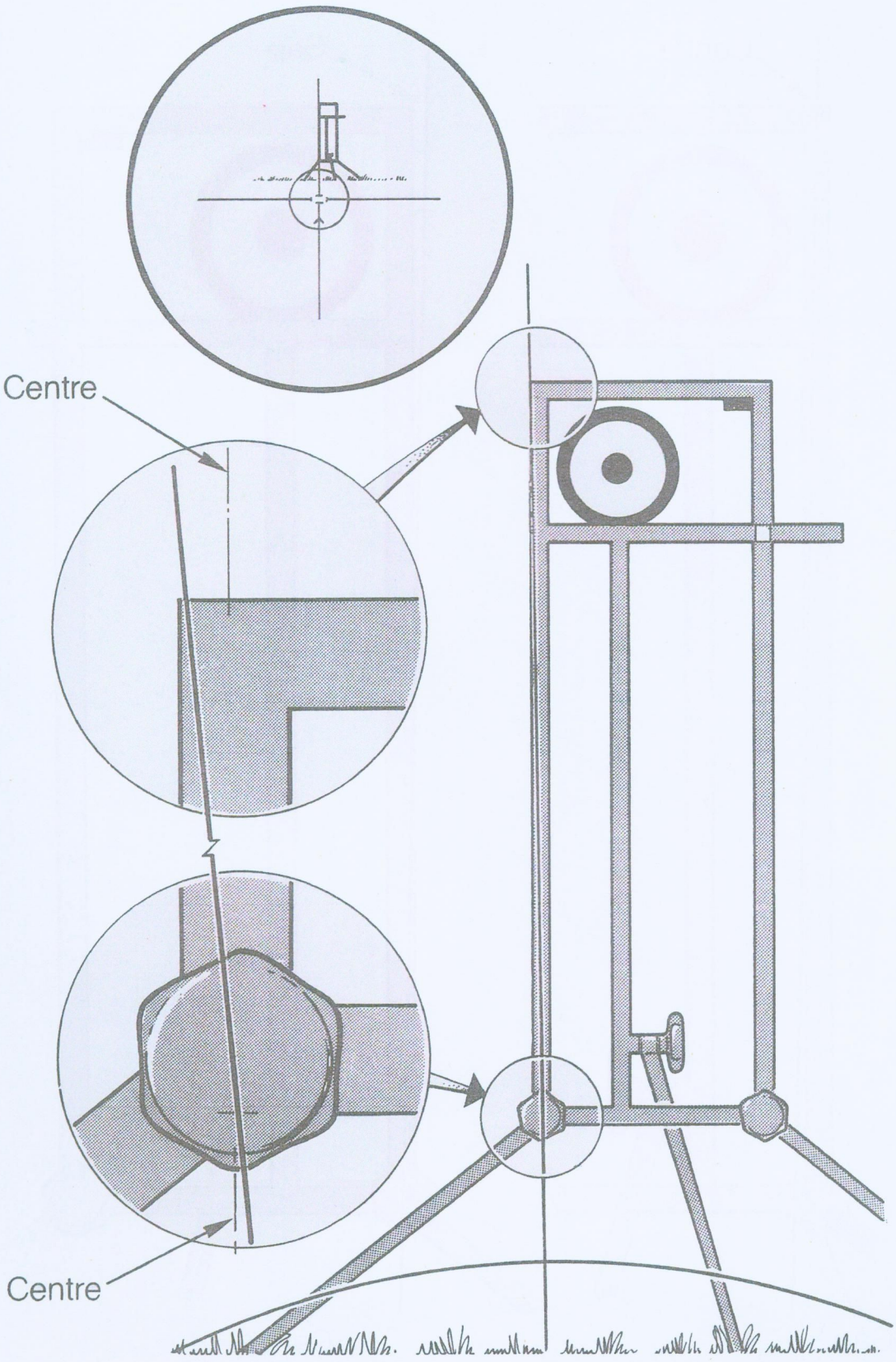

Fig 90. — Vertical Alignment Correct

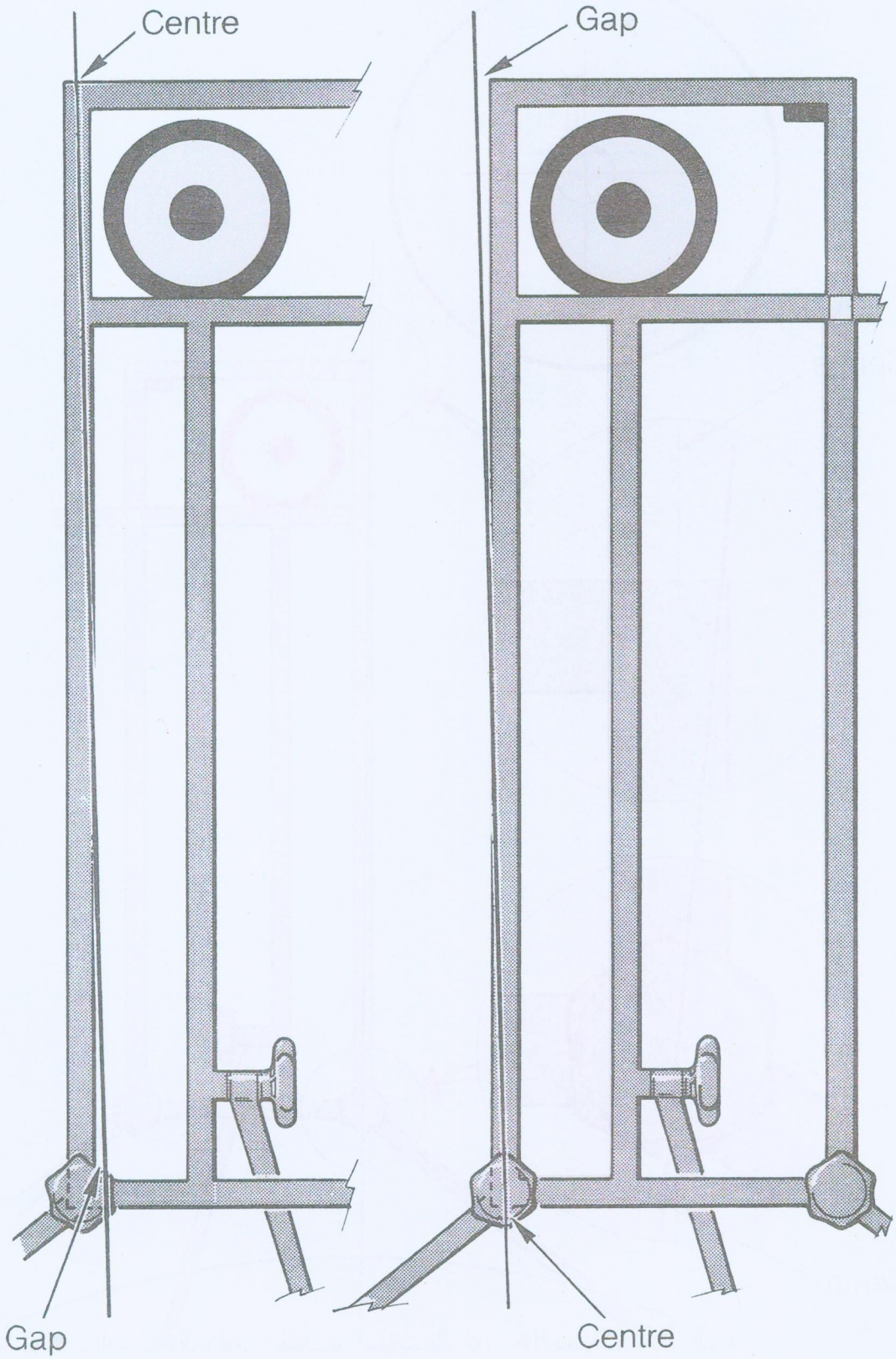

Fig 91. — Vertical Alignment Incorrect

b. *Pack kit.*

c. *Summarize the main points.*

d. *Stress the importance of obtaining correct harmonization.*

LESSON 16. — MIRA HARMONIZATION

A. INSTRUCTOR'S NOTES

03139. ***Aim.*** *To teach:*

a. *How to check the internal harmonization of the visual and infra-red light paths.*

b. *How to assess harmonization.*

c. *The corrected aiming procedures and their application in the event of bad harmonization.*

d. *Occasions for checking harmonization.*

03140. ***Timings.*** *One 40 minute period.*

03141. ***Method.*** *A basic instructional indoor lesson (see Miscellaneous below).*

03142. ***Stores.***

Overhead projector
One firing post
One MIRA complete
Air bottles
Batteries
Aids to show MIRA application to MILAN
Stadia lines, sight pictures during harmonization checks and corrected points of aim relative to bad harmonization
Aiming aids for the squad

03143. ***Preparation.*** *Ensure that all bottles and batteries have been inspected for serviceability. Under no circumstances must defective material be used. Identify a DAP, as close to two kilometres as possible, which can be seen through the tracker optics and has a thermal signature. Firing post and MIRA set up but not switched on. Aids to hand but concealed. Seating arranged.*

03144. ***Miscellaneous.*** *Every attempt should be made to conduct the lesson in such a place where a DAP as described above can be obtained. If it is impossible to*

do so then the relevant part of the lesson can be taught using picture aids. EMR will not pass through glass so if an opening window is unobtainable conduct the lesson outdoors. This lesson teaches a method of checking MIRA harmonization without the aid of any manufactured devices. In the future such a device may become available to the user.

B. CONDUCT OF THE LESSON

Preliminaries

03145. ***Safety Precautions.*** *Detail members of the squad to carry out the inspection of bottles and batteries under supervision.*

03146. ***Revision.*** *Revise the MIRA's application to MILAN in respect of visual and infra-red paths within the system. Emphasize that these two light paths are parallel within MIRA and the relationship is termed harmonization. Revise the reticle stadia lines and their relative dimensions at two kilometres.*

Introduction

03147. *Explain:* If the harmonization is not correct the missile will either not strike the target where it should do in relation to the point of aim or miss the target altogether. It is therefore important that the harmonization is checked on certain occasions and in the absence of the means to adjust it a corrective aiming procedure be known to compensate for bad harmonization.

The Harmonization of Axes

03148. *Explain:* Due to the method of operation of MIRA and the layout of optical components within the equipment, the incoming infra-red represents the true position of objects within the field of view. The visual converted infra-red, provided harmonization is maintained, will also reflect the true position of objects in the field of view. If, however, the harmonization becomes disturbed the optics within the system will displace the visual converted infra-red image. This effect is increased in proportion to range, e.g., a given error of one metre at 1000 metres will increase to two metres at maximum range. If the operator then aimed at the misplaced image he would in effect be aiming into the error resulting in the missile either not striking the target where it should do in relation to the point of aim or missing the target altogether (*see* Fig 92).

Checking Harmonization

03149. *Explain:* Unlike checking the firing post harmonization, no target is provided for checking MIRA harmonization. A target would not be practical considering

the procedures and distances involved. Harmonization is checked using a DAP, at two kilometres, and the stadia lines of the reticle pattern. The stadia lines represent the size of an average main battle tank at maximum range and as such, provided any error in harmonization is not greater than three metres laterally or 1.2 metres vertically at two kilometres, a simple 'corrected aim' will still ensure a hit with the missile.

03150. ***Procedure.*** *Explain and demonstrate:*

a. Select a DAP as close as possible to 2000 metres.

b. Ensure that the firing post is as level as possible.

c. Switch on MIRA and check that the DAP can be seen both in infra-red and visibly through the tracker. Ensure that the infra-red picture is focussed as clearly as possible.

d. Leave MIRA switched on and raise the daylight filter.

e. By traversing and elevating the firing post lay the cross hair of the reticle in the tracker onto the DAP (*see* Fig 93).

f. With the aid of the No. 2, keep the reticle aligned on to the DAP and gently lower the daylight filter thus inducing an infra-red image.

g. Observe the relationship between the cross hair of the reticle and the DAP.

h. Raise the daylight filter and repeat the process.

i. If the relationship between the cross hair and the DAP in infra-red is the same after the second check, an assessment of harmonization can be made. If the relationship is not the same, movement of the firing post must have occurred. Repeat the process until two consecutive sight pictures in infra-red are obtained showing the same DAP to cross hair relationship. When this situation is reached an assessment of harmonization can be made.

03151. *Confirm by questions and practice.*

03152. ***Assessing Harmonization*** (*see* Fig 94). *Explain and demonstrate:* Depending on where the DAP is in relation to the cross hair of the reticle, when viewed in infra-red, will govern subsequent actions as follows:

a. Little or no difference — aim as normal.

b. Appreciable difference but DAP still within the parameters of the stadia lines — 'corrected aim' necessary. Backload to unit REME as soon as possible.

c. Big difference, DAP outside of the parameters of the stadia lines — DO NOT FIRE WITH MIRA, backload to unit REME.

03153. *Confirm by questions.*

Corrected Aim

03154. ***Corrected Aiming Point*** (*see* Fig 95). *Explain and demonstrate:* A corrected aiming point is another part of the reticle pattern within the confines of the stadia lines that is applied to the selected point of aim on the target when MIRA is out of harmonization. The corrected aiming point used is dependent on where MIRA has misplaced the thermal image of the DAP, i.e., if the thermal image of the DAP is on the intersection of the left vertical stadia line and the horizontal crosshair then it is this point that becomes the corrected aiming point and as such is applied to the selected point of aim on all targets in excess of 1000 metres. Due to the small distances involved it is not necessary to apply corrected aiming at ranges of less than 1000 metres even though harmonization might be out.

03155. *Confirm by questions and practice with aiming aids.*

Occasions for Checking Harmonization

03156. *Explain:* Harmonization is to be checked on the following occasions:

a. Before range firings.

b. Before deployment on operations (including Concentration/Assembly Areas).

c. Daily on operations when the tactical situation permits.

d. Immediately following a period of storage.

e. Immediately following a period of transit.

f. If targets in excess of 1000 metres are being missed when firing with MIRA.

g. At any other time deemed necessary.

Conclusions

03157. ***End of Lesson Drill.***

a. *Confirm the complete lesson.*

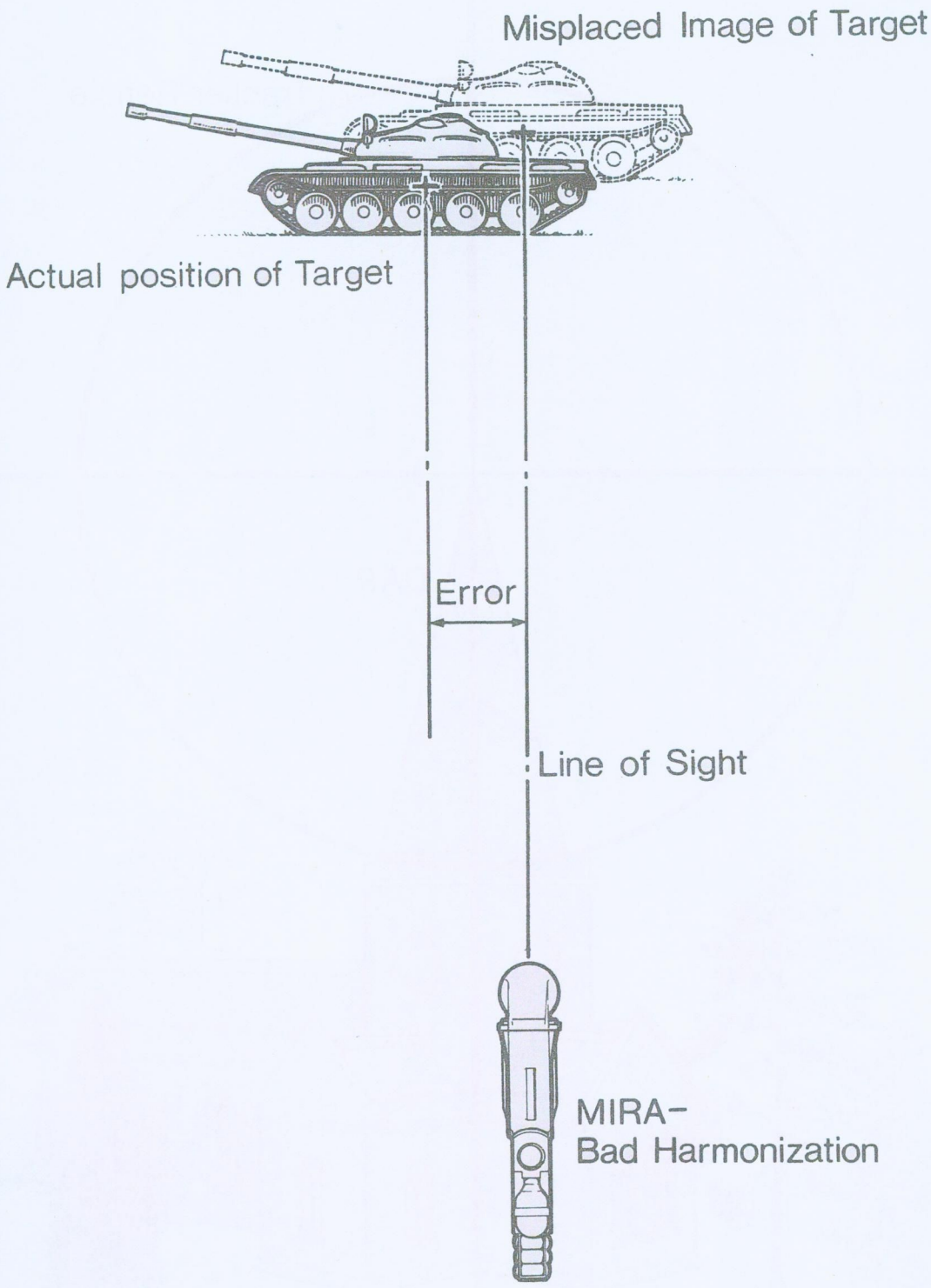

Fig 92. — Effect of Bad Harmonization

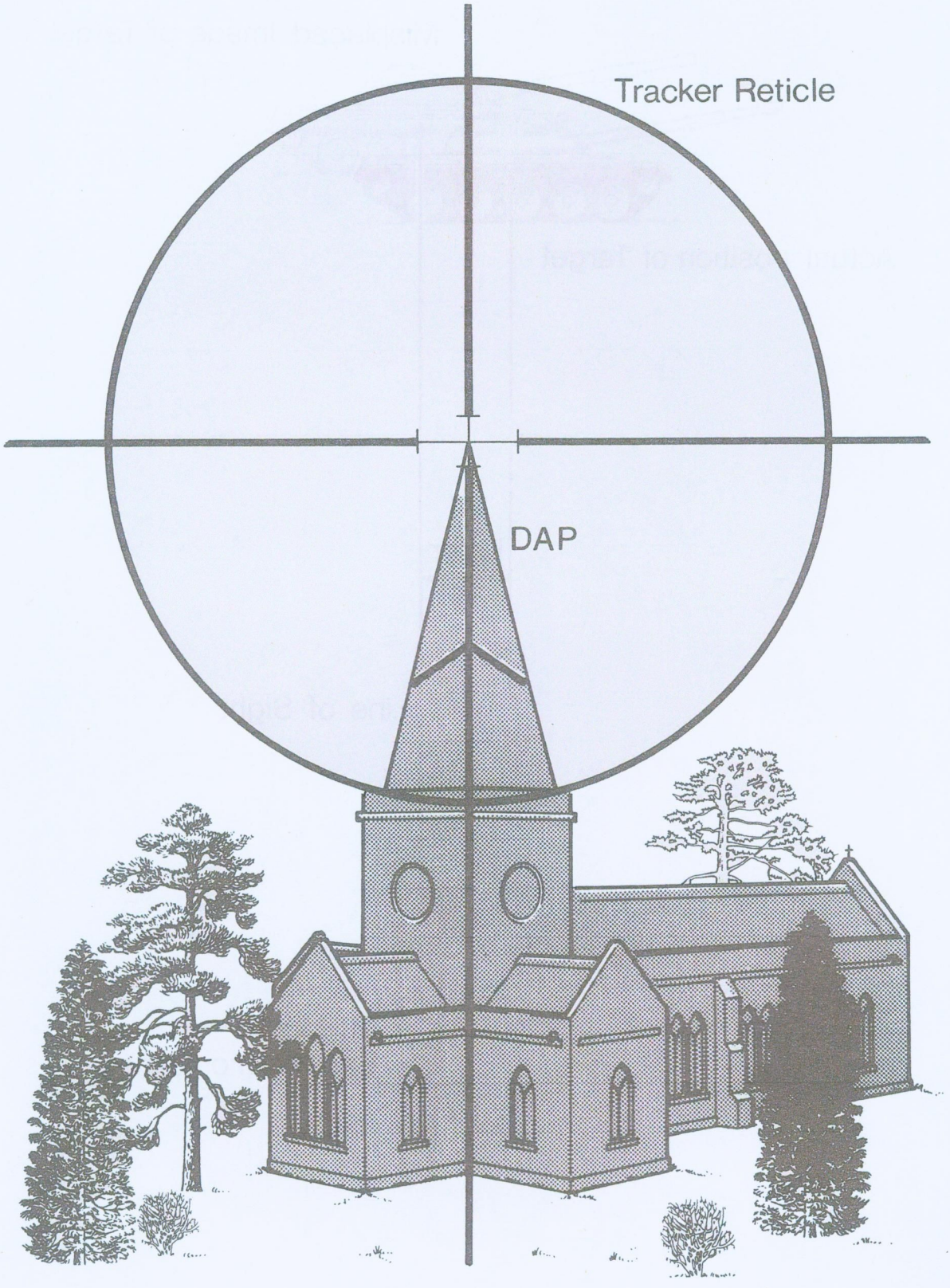

Fig 93. — Tracker Aligned to DAP

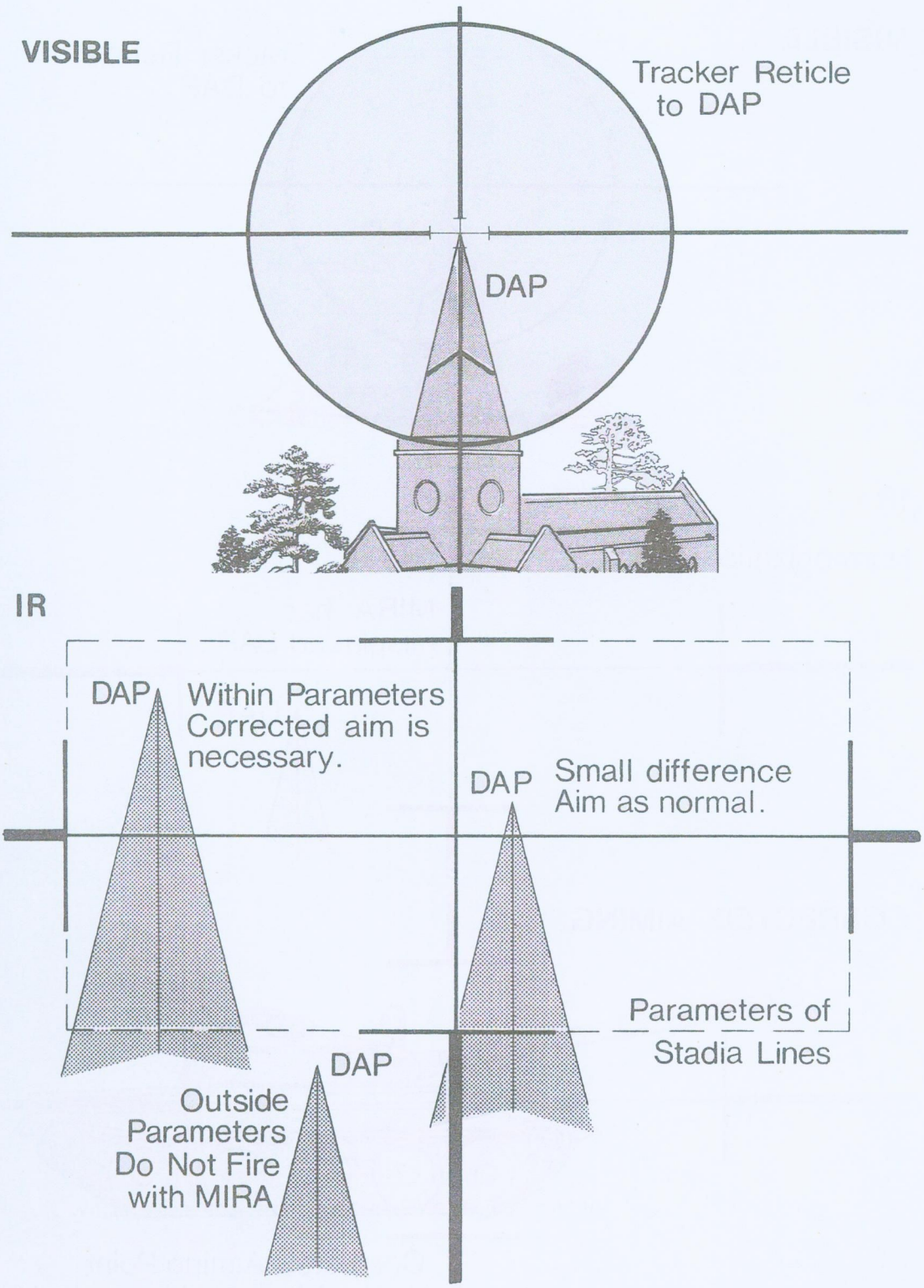

Fig 94. — Assessing Harmonization

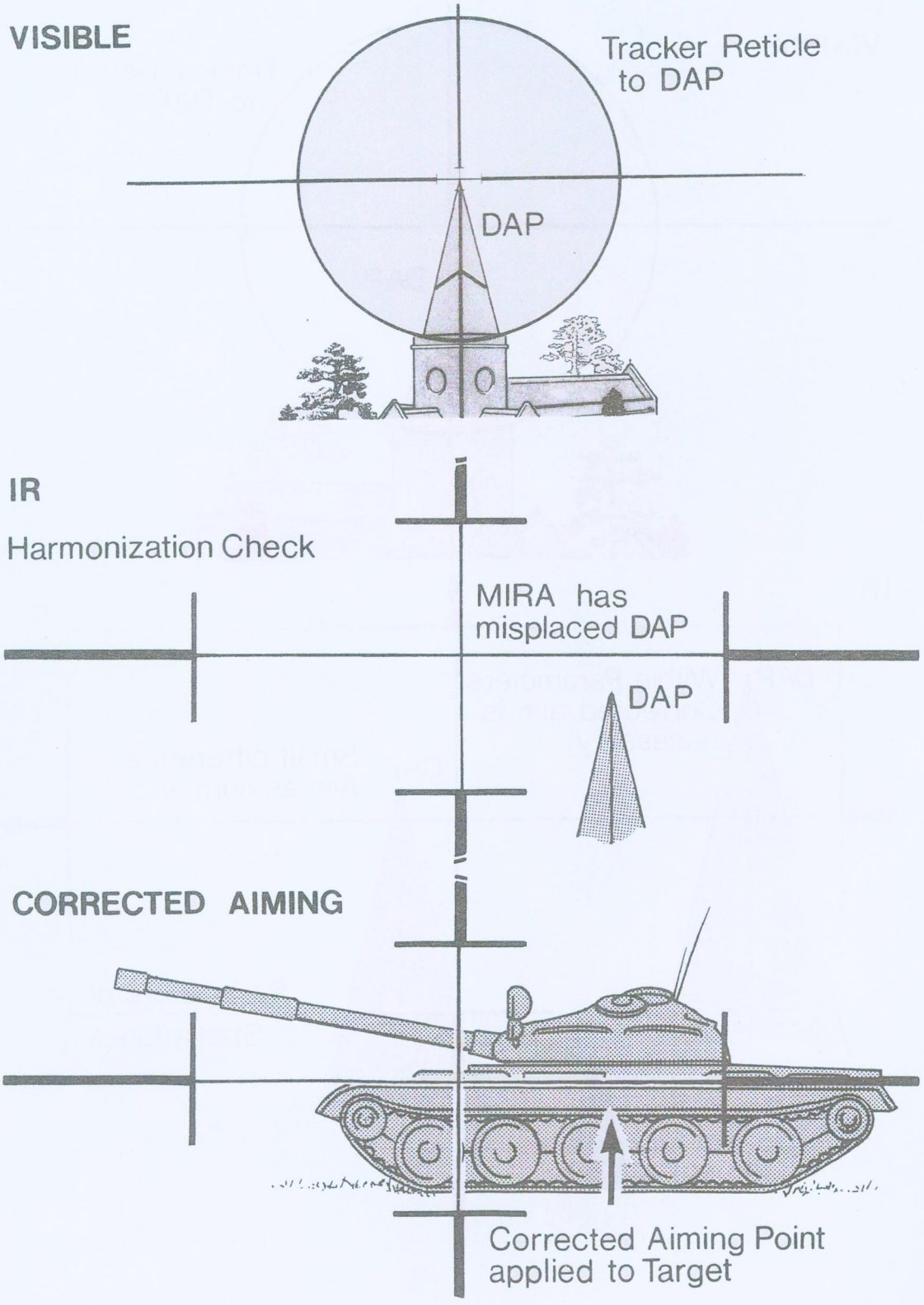

Fig 95. — Corrected Aiming

Chapter 4

THE SIMULATOR

LESSON 17. — GENERAL DESCRIPTION SIMULATOR

A. INSTRUCTOR'S NOTES

0401. ***Aim.*** *To teach a general description of the simulator equipment.*

0402. ***Timings.*** *Two 40 minute periods.*

0403. ***Method.*** *A basic instructional indoor lesson.*

0404. ***Stores.***

One simulator complete to CES

0405. ***Preparation.*** *Simulator logistic containers packed and secured until required. Seating arranged in a semi-circle.*

B. CONDUCT OF THE LESSON

Introduction

0406. ***Explain:*** The simulator provides realistic low cost firing practice. It accurately reproduces missile firings and the simulation of combat conditions. It can be used by instructors and those in control of training to provide a varied and interesting programme for the training and practice of operators using the actual combat weapon. It is sufficiently portable to be used either in a classroom or in the field under tactical conditions. A detailed knowledge of the simulator equipment is essential for all in the MILAN anti-tank platoon so that the equipment is used to its full potential.

Logistic Containers

0407. ***Description and Recognition.*** *Explain and demonstrate:* The simulator is issued, packed in two logistic containers. Both containers are made of reinforced plastic (*see* Fig 96).

0408. ***Container No. 1/2.*** *Explain and demonstrate:* Container No. 1/2 is equipped with four spring loaded carrying handles and ten quick release clamps for the attachment of the lid. Three yellow painted stripes on the container lid and body indicate the correct fitting of the lid. At one end of the container are the humidity indi-

cator and pressure release valve. The humidity indicator will turn pink if there is an unacceptable level of moisture within the container. The pressure release valve may need to be operated before the container is opened. This enables pressure to be equalized and the lid removed. The container when packed weighs approximately 72 kilogrammes.

0409. ***Container No. 2/2.*** *Explain and demonstrate:* Container No. 2/2 is equipped with two spring loaded carrying handles and eight quick release clamps. Yellow stripes, humidity indicator and pressure release valve are similar to those on container No. 1/2. The container when packed weighs approximately 35 kilogrammes.

0410. *Confirm by questions.*

0411. **Contents, Container No. 1/2.** *Explain and demonstrate the unpacking and packing of the container:* Container No. 1/2 (*see* Fig 97), houses the following components:

a. Computer.

b. Battery.

c. Junction box.

d. Battery charger.

0412. *Confirm by questions and practice. End the practice with the container packed.*

0413. ***Contents, Container No. 2/2.*** *Explain and demonstrate the unpacking and packing of the container.* Container No. 2/2 (*see* Fig 98), houses the following components:

a. Sight control unit.

b. Supporting bracket.

***c.** Optical unit.

***d.** Instructor's eyepiece.

e. Headphones.

f. Cables.

g. Tool kit.

***h.** Spare parts kit.

i. Technical handbook.

* The above items are packed in a separate container within Container No. 2/2.

0414. *Confirm by questions and practice. End the practice with the container packed.*

Detailed Description of Simulator Components

0415. *Get one of the squad to unpack container 1/2. Describe the components and their function.*

0416. ***Computer.*** *Explain and demonstrate:*

a. *Function.* The computer programmes the spot movement which represents the missile tracer flare and also reacts to the guidance command signals provided by the firing post.

b. *Description.* The computer is installed in an ammunition tube. At the front end of the tube there are two cables. The one fitted with a three pin plug connects to the battery. (This may have been replaced with a connection suitable for a Clansman 351 battery.) The other fitted with a 32 pin plug connects to the junction box. Both cables remain connected to the computer and are coiled and stowed in the compartment at the front end of the tube. A carrying handle and an adjustable web strap are fitted on top of the tube and both ends are protected with covers the same as those on the live ammunition tube. The underside of the tube is fitted with a support to prevent it rolling when placed on the ground. At the rear of the tube is the control panel (sealed by a lead seal), on which the following are situated (*see* Fig 99):

(1) Range setting knob, graduated from 0-2000 metres, in 100 metre graduations numbered every 500 metres.

(2) Brightness adjustment knob, for varying the brightness of the spot or fictive target.

(3) On/Off switch.

(4) Red indicator light, indicating that there is power to the simulator.

(5) Green indicator light, indicating that the simulator is ready to fire.

(6) Five position switch, which can be set at any of the following:

(a) 'Centralize', for centralizing the light spot that represents the missile tracer flare.

(b) 'Normal', for an injected light spot representing the missile tracer flare.

(c) 'Smoke 1', for simulation of 0.5 seconds of smoke obscuration.

(d) 'Smoke 2', for simulation of two seconds of smoke obscuration.

(e) 'Fictive target', for an injected target image.

(7) Counter, that totals the number of firings.

(8) Socket, that provides a connection for the cable to the sight control unit.

(9) A 2.5 amp fuse.

(10) Handgrip, for use by REME when removing the computer from the tube.

0417. *Confirm by questions.*

0418. ***Battery.*** *Explain and demonstrate:* The battery provides the electrical power that operates the simulator. The battery is contained in a second ammunition tube. It will power approximately 600 firings before recharging is necessary. A carrying handle, adjustable web strap, protective covers and support are fitted. At the rear end of the tube is a three pin socket for connecting the cable from the computer.

0419. *Confirm by questions.*

0420. ***Junction Box.*** *Explain and demonstrate:* The junction box (*see* Fig 100), provides an electrical link between the simulator and the firing post. It represents the junction box fitted to the live ammunition tube. It has four electrical connections as follows:

a. A spring loaded connection to the firing post.

b. A socket for the headphone jack.

c. A cable mounted plug for connection to the optical unit.

d. A socket mounted on a panel to receive the plug from the computer.

0421. *Confirm by questions.*

0422. ***Battery Charger.*** *Explain and demonstrate:* The battery charger (*see* Fig 101), is used to recharge the battery from the mains. The charger is housed in a light alloy cast case. A radiator covered by a protective grill is mounted on the rear of

the case and on the top is a fold away carrying handle. It has a control panel fitted with the following:

a. Four indicator lights, that display the battery charging cycle as follows:

(1) Discharge — Red.

(2) Charge — Blue.

(3) Trickle — Green.

(4) Fault — Orange.

b. On/Off switch.

c. Red 'Mains' power on light.

d. One amp fuse.

e. Mains socket.

f. Socket, that provides the connection for the cable to the battery.

0423. *Confirm by questions.*

0424. *Get one of the squad to remove the lid of container 2/2.*

0425. ***Sight Control Unit.*** *Explain and demonstrate:* The sight control unit is used by the instructor to control the fictive target. It also records the number of firings and the number of correct firings. Two offset limit switches allow the instructor to alter the acceptable error made by the operator when tracking targets. By means of a switch, the instructor is able to monitor either the whole trajectory or the last 200 metres only. The control unit is contained in a light alloy case. A recessed panel at the back of the case is fitted with two sockets. Only the right hand socket is used to link the control unit to the computer and firing post. The control panel (*see* Fig 102) is fitted with the following:

a. On/Off switch.

b. Firing counter with reset button.

c. Correct firings counter with reset button.

d. Two regulators for controlling the speed and angle of movement of the fictive target:

(1) Target Speed — Elevation. Numbered from 1 to 5 mils, up and down, subdivided into 0.5 mils graduations.

(2) Target Speed — Azimuth. Numbered from 0 to 25 mils both to left and right, subdivided into 1 mil graduations.

e. Trajectory selector switch which enables the instructor to select either whole trajectory or the last 200 metres.

f. Vertical and horizontal offset limit switches. Numbered from 0.5 to 10 metres, subdivided into 0.5 metre graduations up to 3 metres and 2 metre graduations between 3 and 7 metres.

0426. *Confirm by questions.*

0427. ***Optical Unit.*** *Explain and demonstrate:* The optical unit is the part of the equipment which simulates the missile flight. It also simulates weight displacement and can simulate smoke obscuration at launch. A luminous source produces either a missile spot representing the tracer flare or a fictive target represented by an illuminated outline square. The optical unit (*see* Fig 103) is housed in a light alloy casing. It consists of the following parts:

a. A threaded socket, with protective cover, for the attachment of the instructor's eyepiece and two contacts for connections with two spring loaded terminals on the eyepiece.

b. A selector switch for selection of either spot or fictive target.

c. Two knobs for centralizing the spot onto the tracker reticle for elevation and azimuth.

d. A socket to receive the cable from the junction box.

e. An entry window onto which the tracker lens cover is fitted.

f. An exit window which, when correctly positioned, is situated in front of the tracker lens and held by two studs and two clamps on the supporting bracket.

0428. *Confirm by questions.*

0429. ***Supporting Bracket.*** *Explain and demonstrate:* The supporting bracket is clamped to the support assembly on the firing post and secures the optical unit in the correct position in front of the tracker lens. It consists of the following parts (*see* Fig 104):

a. A clamp for securing it to the support assembly.

b. A platform which is adjustable by means of three knurled knobs. Each knurled knob has three lock nuts which lock the platform in position.

0430. *Confirm by questions.*

0431. ***Instructor's Eyepiece.*** *Explain and demonstrate:* The eyepiece (*see* Fig 105) allows the instructor to observe the target and monitor the aiming and tracking of the firer. It contains a similar reticle to that of the tracker which can be adjusted so that the instructor sees the same picture as the firer. The magnification of the eyepiece is x 6.25 and it has a 200 mil field of view. The eyepiece is secured to the optical unit by means of a keyway and securing ring. The keyway ensures that when fitting the eyepiece, the spring loaded terminals coincide with the brass terminals on the optical unit. Two verniers on the upper section graduated from zero to four, provide adjustment of the reticle in elevation and azimuth. The reticle is illuminated by red light for operation at night. The level of brightness can be set by means of a selector switch mounted on the upper section. At position 'O', the light is off, positions '1, 2, 3 and 4', provide increasing levels of brightness. The power is provided by the simulator's battery.

0432. *Confirm by questions.*

0433. ***Other Items.*** *Explain and demonstrate:* The firer uses the headphones to hear the simulated noise of firing generated by the computer. The headphones are connected by a two part cable to a jack which fits the socket on the junction box. A total of four separate cables are supplied for the electrical connections of the equipment. The majority of cable plugs and sockets are equipped with protective covers. These should always be fitted when the equipment is disconnected. Other items included are the following spare parts and tools:

a. 13 mm box spanner.

b. 17 mm box spanner.

c. 17 mm flat spanner.

d. Two indicator light bulbs.

e. One spot or target lamp.

f. One lamp fuse.

g. One 2.5 amp fuse.

h. One 2.5 mm Allen key.

i. Technical handbook.

0434. *Confirm by questions.*

0435. ***Seven Metre Corrective Lens.*** *Explain:* In order to use the firing post with scale models at close range, e.g., AFV identification/fire control training, a corrective lens is provided to allow focussing down to seven metres. The corrective lens is housed in a container which is fitted with a carrying handle and quick release fas-

tener. Inside the container is a moulded recess which houses the corrective lens. A recess is also provided to accept the protective cover of the tracker's lens. The corrective lens is fitted and removed in the same way as the tracker's protective lens cover and is fitted to either the tracker's objective lens or, if using the simulator, to the objective lens of the optical block.

0436. *Confirm by questions and practice.*

Conclusion

0437. ***End of Lesson Drill.***

a. Confirm the complete lesson.

b. Pack kit.

c. Summarize the main points.

d. Stress the importance of a thorough knowledge of the basic components of the equipment and their function before further instruction in simulator operation.

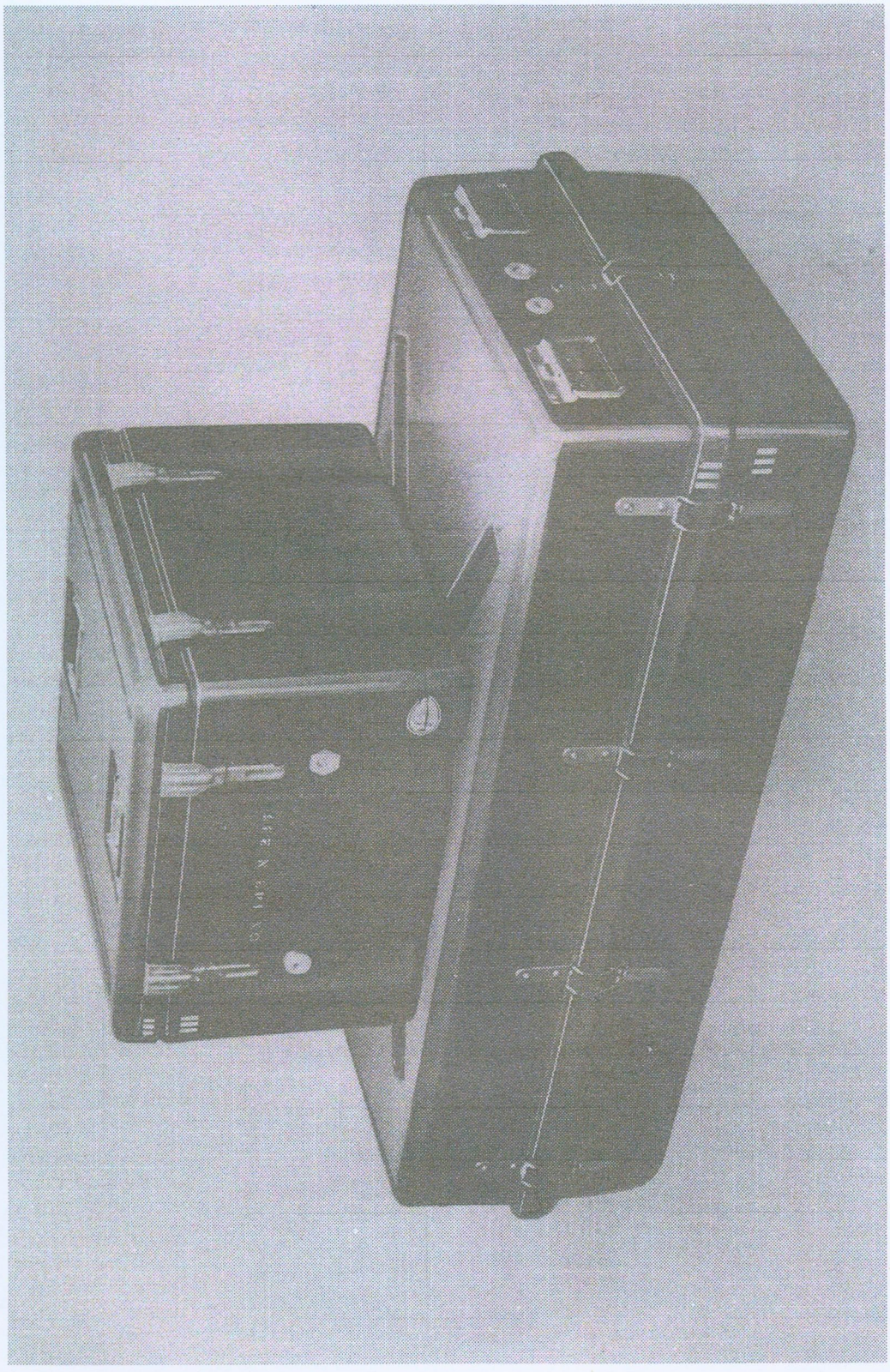

Fig 96. — Simulator Logistic Containers

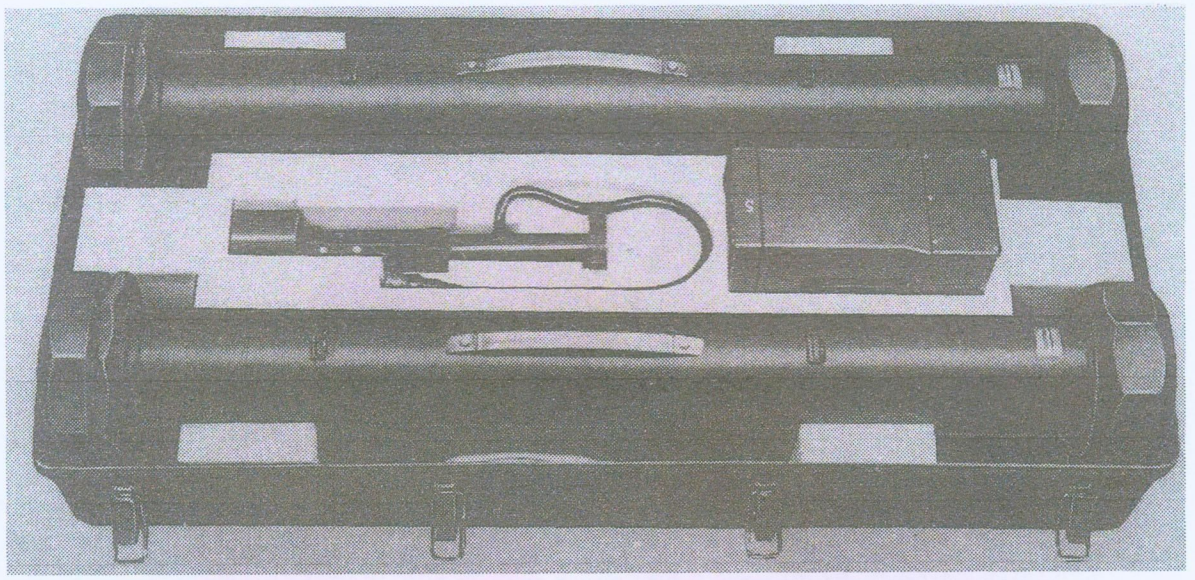

Fig 97. — Container No. 1/2 and Contents

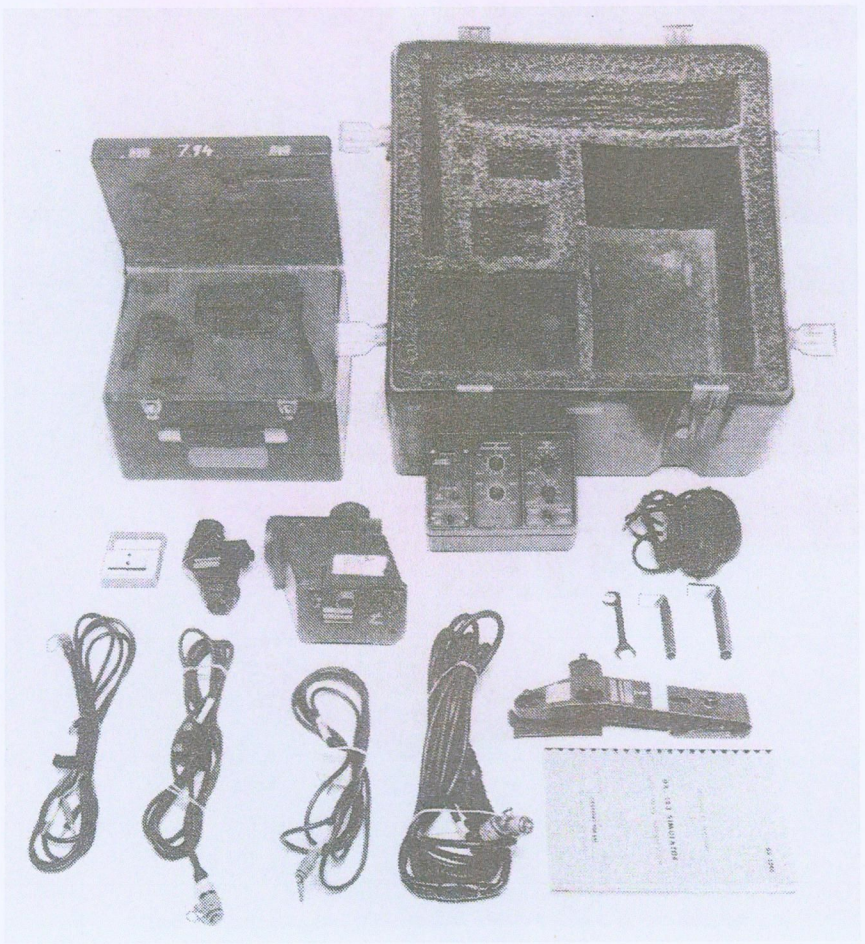

Fig 98. — Container No. 2/2 and Contents

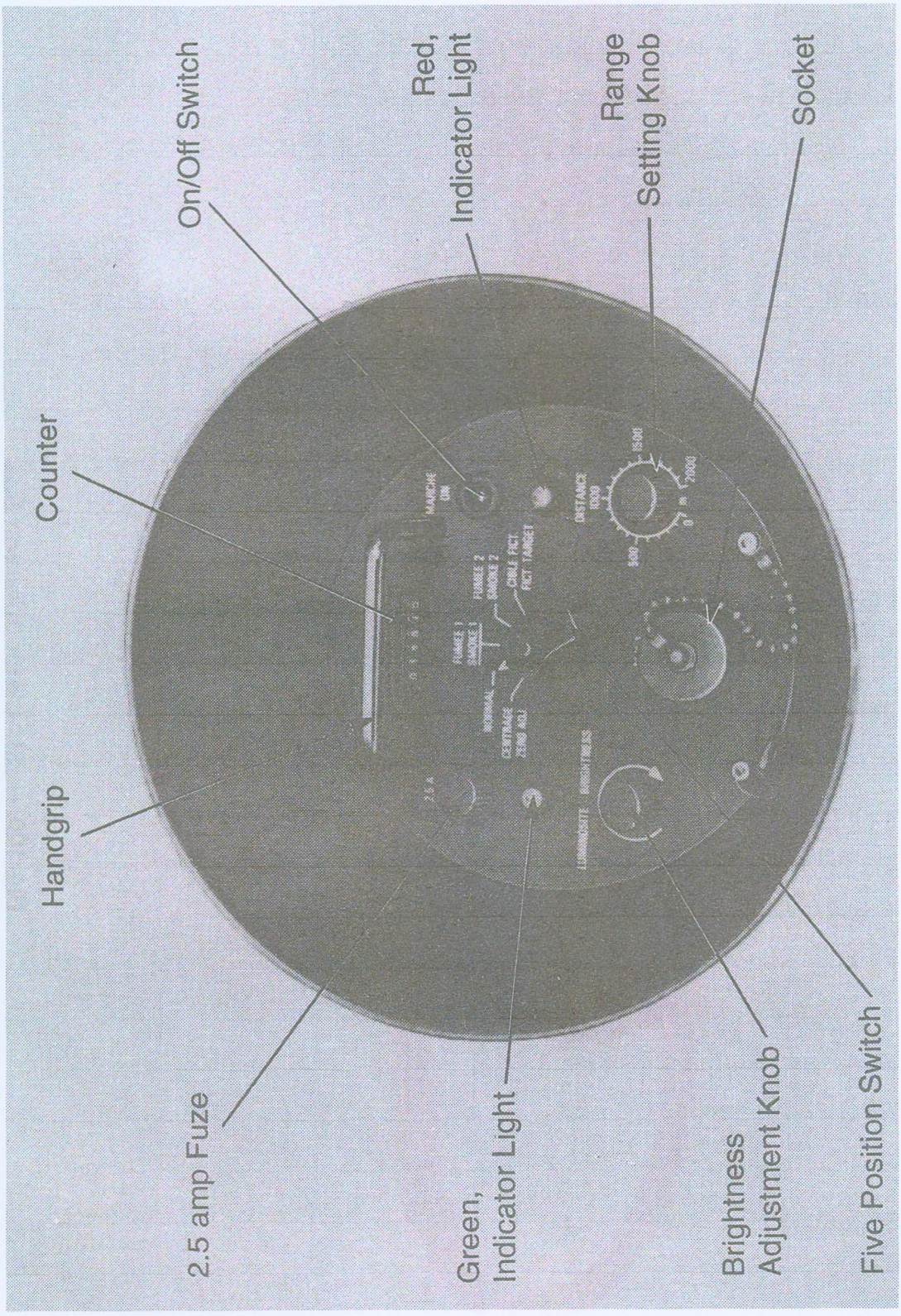

Fig 99. — Computer Control Panel

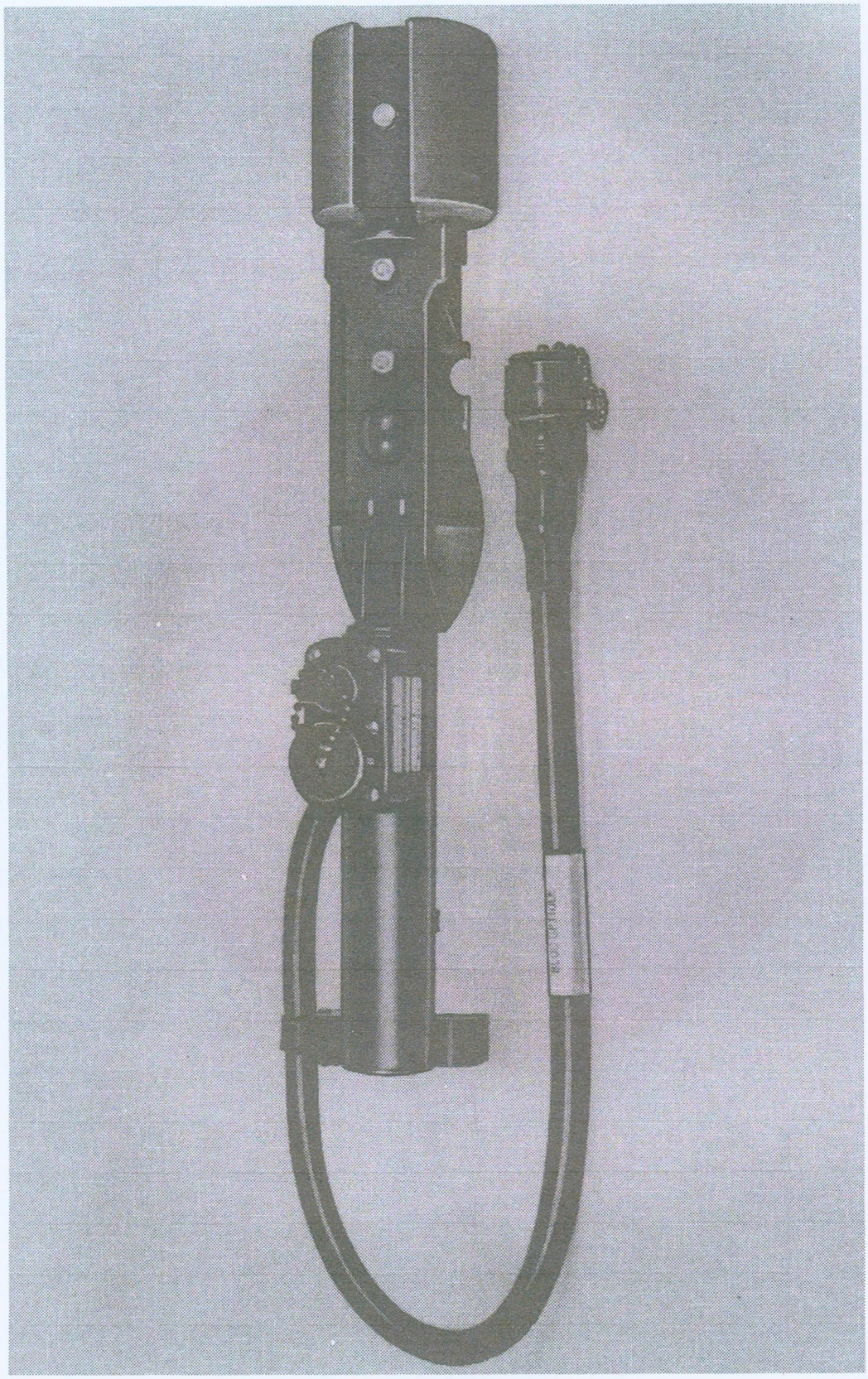

Fig 100. — Simulator Junction Box

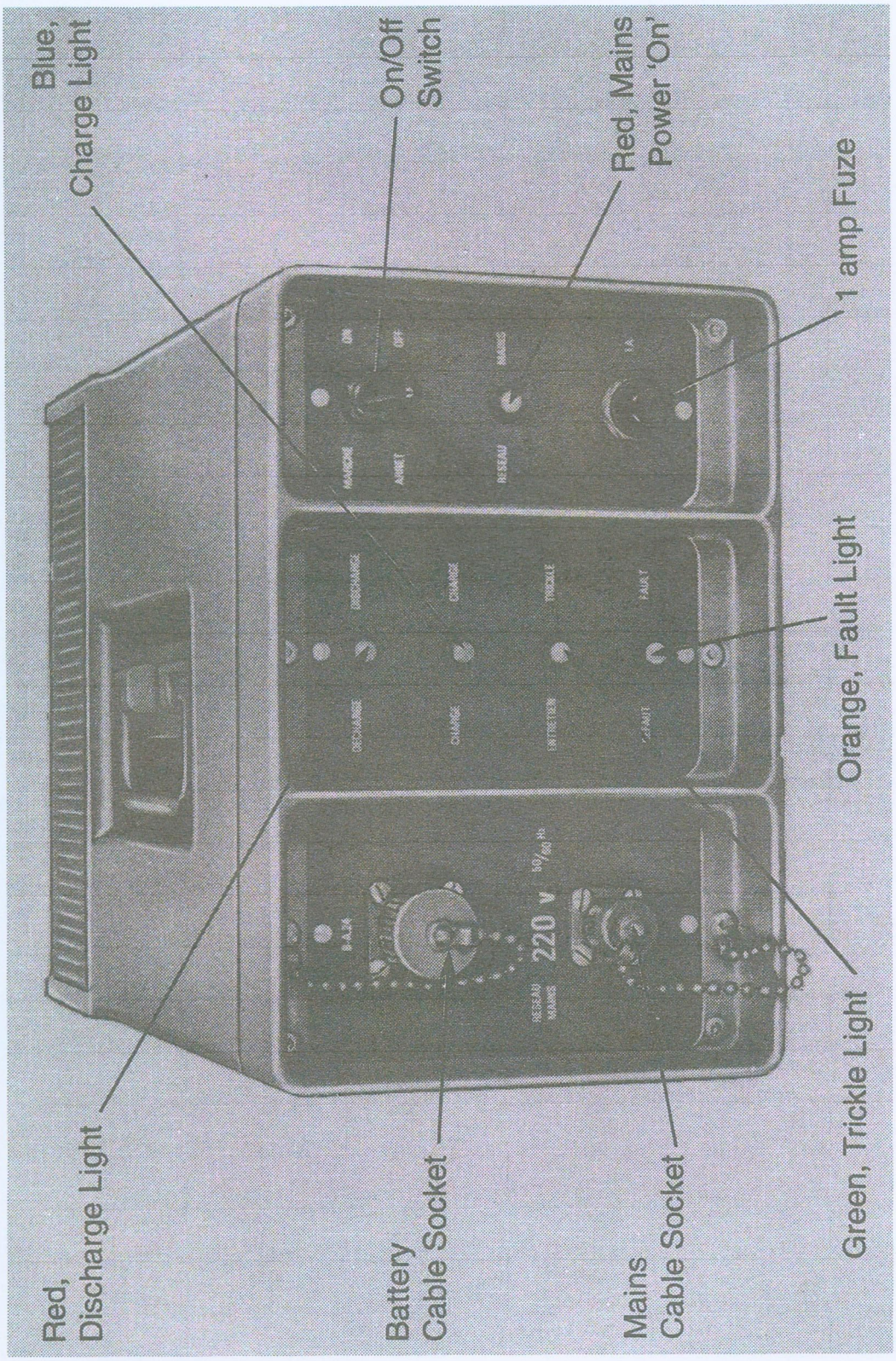

Fig 101. — Battery Charger

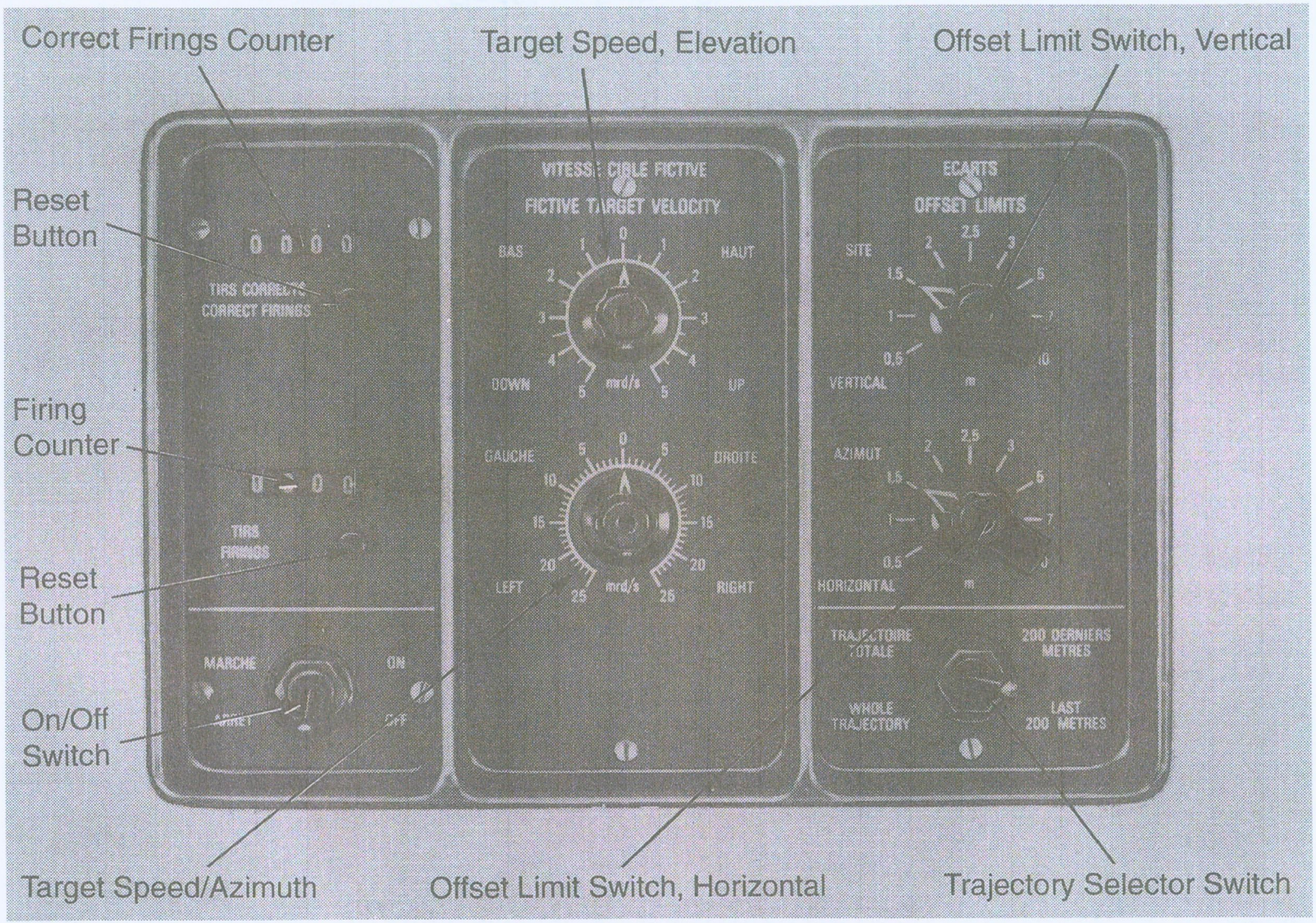

Fig 102. — Sight Control Unit

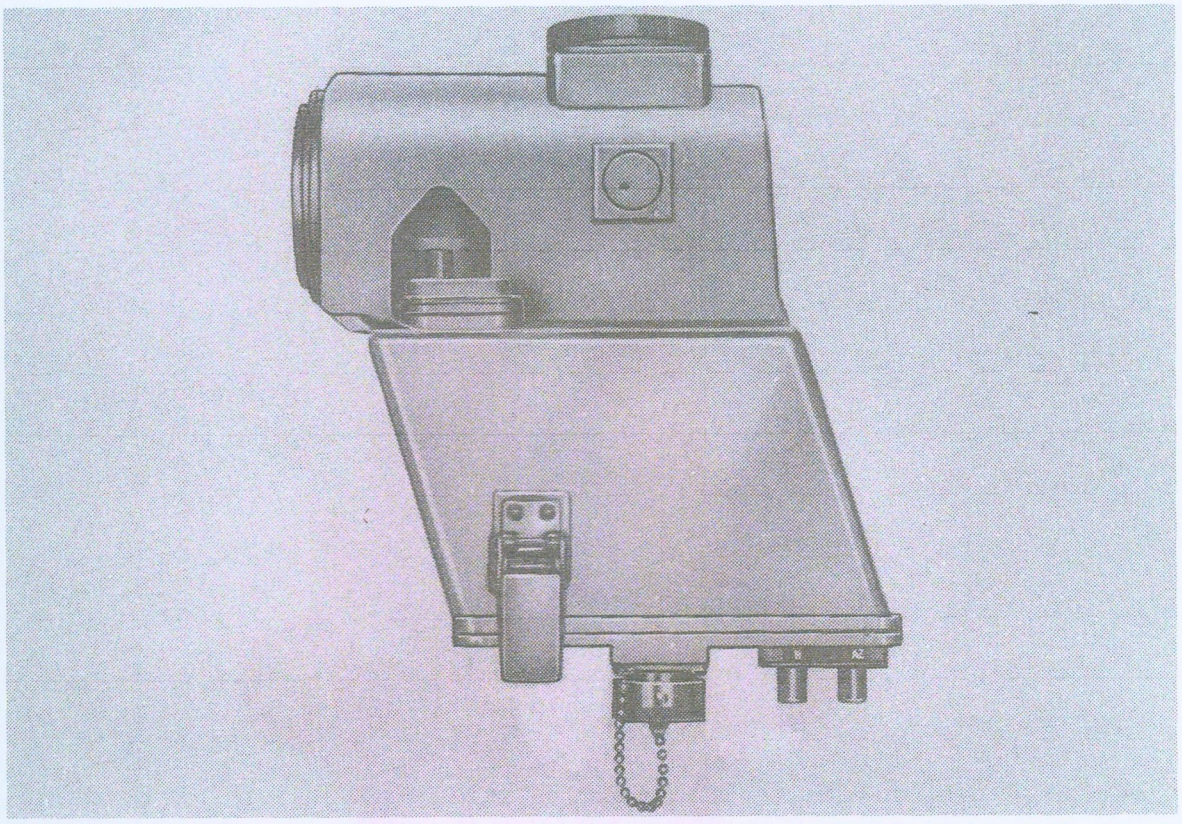

Fig 103. — The Optical Unit

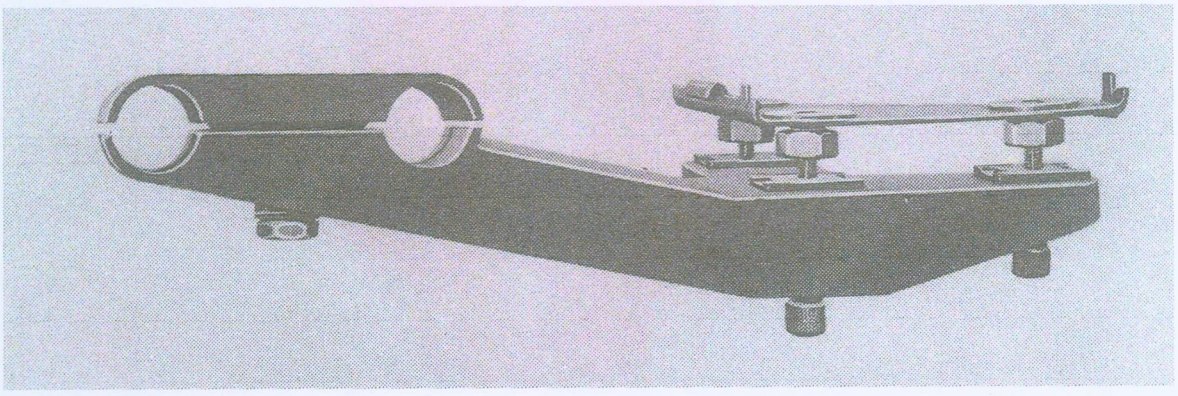

Fig 104. — The Supporting Bracket

Fig 105. — The Instructor's Eyepiece

LESSON 18. — ASSEMBLING AND DISMANTLING THE SIMULATOR

A. INSTRUCTOR'S NOTES

0438. ***Aim.*** *To teach:*

a. *Assembling the simulator.*

b. *Alignment procedure.*

c. *Electrical connections.*

d. *Centralizing procedure.*

e. *Dismantling.*

0439. ***Timings.*** *Two 40 minute periods.*

0440. ***Method.*** *A basic instructional indoor lesson.*

0441. ***Stores.***

One firing post
One simulator complete to CES

0442. ***Preparation.*** *Simulator packed in its logistic container, firing post assembled and seating arranged for the squad.*

0443. ***Miscellaneous.*** *The place of work should be selected so that there is a field of view of at least 30 metres available for teaching the alignment procedure.*

B. CONDUCT OF THE LESSON

Preliminaries

0444. ***Revision.*** *Revise the simulator components, their functions and the functions of the various controls.*

Introduction

0445. ***Explain:*** The simulator must be correctly set up and adjusted so that an accurate representation of missile flight is achieved. It is important that the procedures described in this lesson are adhered to as failure to do this will result in differences between what is seen through the tracker and the instructor's eyepiece.

Assembling

0446. ***The Supporting Bracket.*** *Explain and demonstrate:* The supporting bracket is attached to the front of the support assembly so that the platform is positioned in front of the tracker. To fit the supporting bracket, place the support clamp beneath and between the two rails ensuring that the clamp is up against the welded points and tighten the lock nut with the 17 mm box spanner (*see* Fig 106).

0447. ***The Optical Unit.*** *Explain and demonstrate:* To fit the optical unit (*see* Fig 107), carry out the following drill:

a. Remove the tracker lens cover and fit it to the entry window of the optical unit.

b. Engage the two studs on the bottom of the unit with the corresponding holes on the supporting bracket. It is important that the guide pins engage in their fittings to ensure that the mounting is stable and secure.

c. Close and lock the two quick release fasteners.

0448. ***Instructor's Eyepiece.*** *Explain and demonstrate:* To fit the instructor's eyepiece carry out the following drill:

a. Unscrew the protective cover from the top of the optical unit.

b. Screw the eyepiece to the top of the optical unit (see Fig 108).

c. Set the two verniers to 2.0.

0449. *Confirm by practice.*

Adjustments

0450. *Explain:* Before simulated missile firing can take place, the optical axes of the tracker and the optical unit must be aligned.

Aligning

0451. *Explain:* The aligning of the optical axes is normally carried out once only. The dismounting of the optical unit and subsequent reassembly will not alter the alignment to any great extent. However, it is necessary to check the alignment each time the simulator is used.

0452. ***Alignment Procedure.*** *Explain and demonstrate:* To align the tracker and the optical unit carry out the following drill:

a. Loosen these nuts on the supporting bracket:

(1) The three 17 mm ball joint clamp nuts using the flat spanner.

(2) The three 13 mm lock nuts.

(3) The three 17 mm nuts.

b. Select a well defined object at least 30 metres away to use as an aiming point, e.g., a telegraph pole, corner of a building, etc., and indicate this to the assistant. Get the assistant to traverse and elevate the firing post until the cross hair of the reticle in the tracker is on the selected aiming point (*see* Fig 109). Ensure that either the vertical or horizontal cross hair of the reticle coincides with a vertical or horizontal part of the aiming point by adjusting the tripod legs.

c. With the assistant holding the firing post steady; look through the instructor's eyepiece and align the cross hairs onto the same point of aim as the firing post by adjusting the three knurled knobs. The front two to ensure a level plane and the rear one to adjust for elevation. Obtain azimuth adjustment by means of the play in the bottom plate.

d. Check that both aim pictures are identical.

e. Hold the optical unit in position and carefully tighten the rear 17 mm nut, then the two front 17 mm nuts. Azimuth movement is now locked but fine adjustments for tilt and elevation can still be made using the three knurled knobs.

f. Tighten the three 17 mm ball joint clamp nuts.

g. Tighten the three 13 mm lock nuts.

h. Check again that both aim pictures are identical and aligned on the aiming point.

i. If not, traverse and elevate the firing post until the cross hair of the reticle in the tracker is re-aligned onto the aiming point. Re-align the cross hairs of the instructor's eyepiece onto the same aiming point by means of the two verniers.

j. Check for the third time that both aim pictures are identical and aligned on the aiming point.

0453. *Confirm by practice.*

0454. ***Checking Alignment.*** *Explain and demonstrate:* On subsequent setting up of the simulator, it is only necessary to check and adjust the instructor's eyepiece as in sub paragraphs **h.** and **i.** above.

0455. *Confirm by questions and practice.*

Electrical Connections

0456. ***General.*** *Explain and demonstrate:* When making the various connections, it is important that no force is exerted otherwise damage to the connections will result. The male and female parts of the connections and the locating studs must be checked to ensure that they are serviceable before connections are made.

0457. ***Junction Box.*** *Explain and demonstrate:* The junction box is attached to the support assembly and locked in position in the same way as the ammunition tube.To connect the junction box carry out the following drill:

a. Pass the junction box cable down through the support assembly and forward of the firer's handgrip.

b. Lock the junction box to the support assembly.

c. Connect the junction box cable to the socket on the underside of the optical unit.

0458. ***Computer.*** *Explain and demonstrate:* Connect the computer in the following sequence:

a. Ensure that the computer is switched off.

b. Remove the two cables from the front end of the computer tube.

c. Connect the 32 pin cable to the underside of the junction box.

d. Do not connect the power supply cable at this stage.

0459. ***Sight Control Unit and Three Branch Cable.*** *Explain and demonstrate:* Connect the three branch cable to the following points:

a. The large rear socket of the sight control unit.

b. The computer.

c. The firing post test connector.

0460. ***Headphones.*** *Explain and demonstrate:* Join the two cables and connect the jack to the socket on the underside of the junction box.

0461. ***Power Supply Cable.*** *Explain and demonstrate:* Before the power supply cable is connected, ensure that all connections are correctly fitted, all protective covers are mated and the computer and sight control unit are switched off, then connect the power supply cable to the battery. The electrical connections are now complete and the simulator is ready for 'centralizing'.

0462. *Confirm by questions and practice.*

Centralizing

0463. *Explain:* The centralizing adjustment is carried out immediately after the simulator has been aligned and all the electrical connections made. It involves an adjustment which consists of centralizing the light spot in the reticle.

0464. ***Centralizing Procedure.*** *Explain and demonstrate:* To centralize the light spot carry out the following drill:

a. Set the 'Spot/Target' switch on the optical unit to 'Spot'.

b. On the computer panel:

(1) Set the five position switch to 'Centralize'.

(2) Set the range control knob to 2000 metres.

(3) Adjust the brightness control knob to the halfway position.

(4) Switch on. This should cause the red power light to glow and at the same time the gyro in the optical unit should be heard to run up.

(5) Wait until the green light glows. This takes approximately one minute and is a visual indication that the simulator is ready for operation.

c. Put the safety flap to 'Fire' and press the firing button. The luminous spot representing the missile tracer flare will then be visible in both fields of view.

d. Using the brightness control knob on the computer panel, adjust the brightness. When the flight time is complete there will be a pause of approximately three seconds, this gives the computer time to readjust, the green light will then glow, indicating that the simulator is ready for firing again.

e. Look through the tracker, press the firing button again and adjust the spot, using the adjustment knobs on the underside of the optical unit, until it is correctly positioned in the centre of the cross hairs (*see* Fig 110).

f. It may be necessary to press the firing button several times to ensure that the spot is in the correct position.

g. If, when the firer is satisfied that the spot is in the correct position, it is not correct when viewed through the instructor's eyepiece; then the instructor must move the reticle in the instructor's eyepiece, using the verniers, to achieve the same aim picture (*see* Fig 111).

h. Once this task has been completed, the simulator is ready for use in either the spot or fictive target role.

0465. *Confirm by questions and practice.*

0466. ***Faults.*** *Explain:* While setting up the simulator, if any lights fail to illuminate or the simulator fails to function, switch off the computer and disconnect the power supply. Check all electrical connections. Connect the power supply and switch on the computer. If the fault continues, repeat the procedure with a battery you know to be charged. If the fault still continues seek REME assistance.

Dismantling

0467. ***Procedure.*** *Explain:* Provided that the computer and the sight control unit are switched off and the power supply cable is disconnected from the battery, there is no set sequence for dismantling. During dismantling all components must be thoroughly inspected and if necessary cleaned as follows:

a. The outside of all components, including cables, thoroughly cleaned and dried using clean rags. Any accumulation of mud is to be removed using a damp cloth and grease spots are to be removed using a cloth and white spirit.

b. Lenses are to be cleaned in the normal way using only lens cleaning materials.

c. The male and female connections including protective caps are to be thoroughly dried using 'fluff free' clean rags. Any accumulation of dirt or mud is to be removed using a stiff nylon brush and white spirit if necessary. At no time should any other cleaning materials be used otherwise serious damage may result.

d. On completion ensure that all protective lens covers and socket plugs are positioned carefully and each component is stowed in its correct position in the logistic containers.

0468. *Confirm by practice.*

Conclusion

0469. ***End of Lesson Drill.***

a. *Confirm the complete lesson.*

b. *Summarize the main points.*

c. *Stress the importance of accuracy when aligning and centralizing the spot and of following the correct sequence when assembling the equipment.*

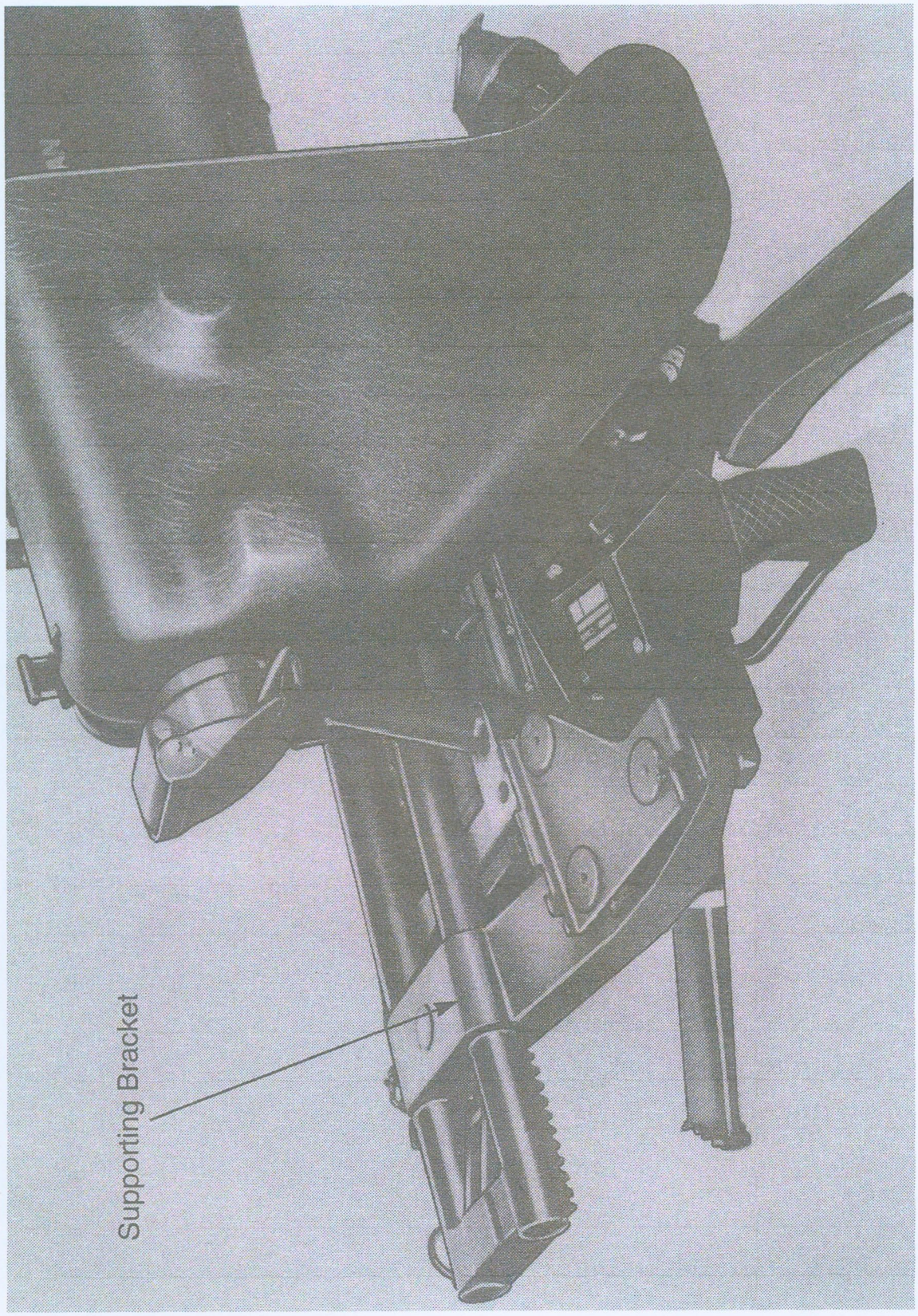

Fig 106. — The Supporting Bracket Fitted

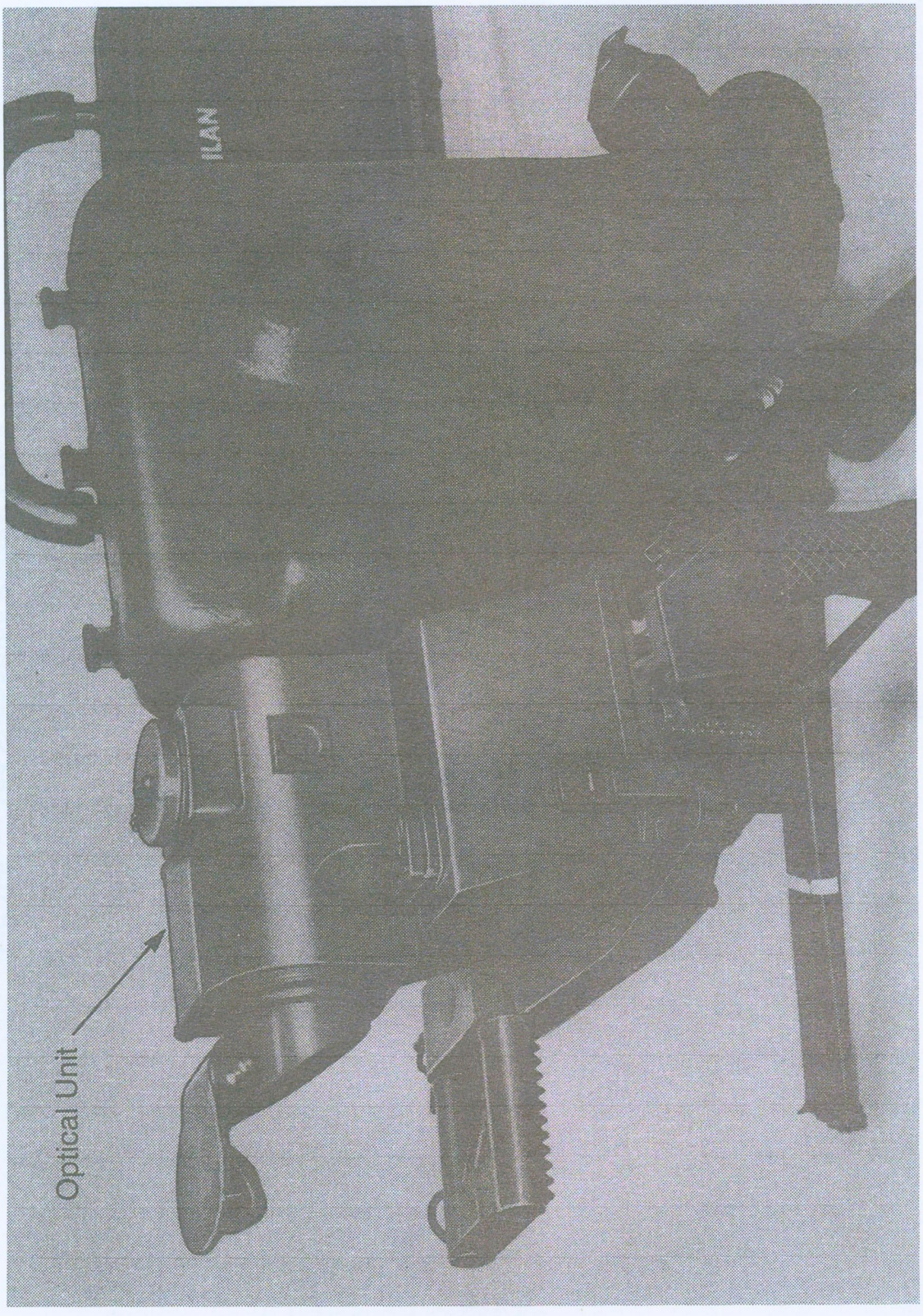

Fig 107. — The Optical Unit Fitted

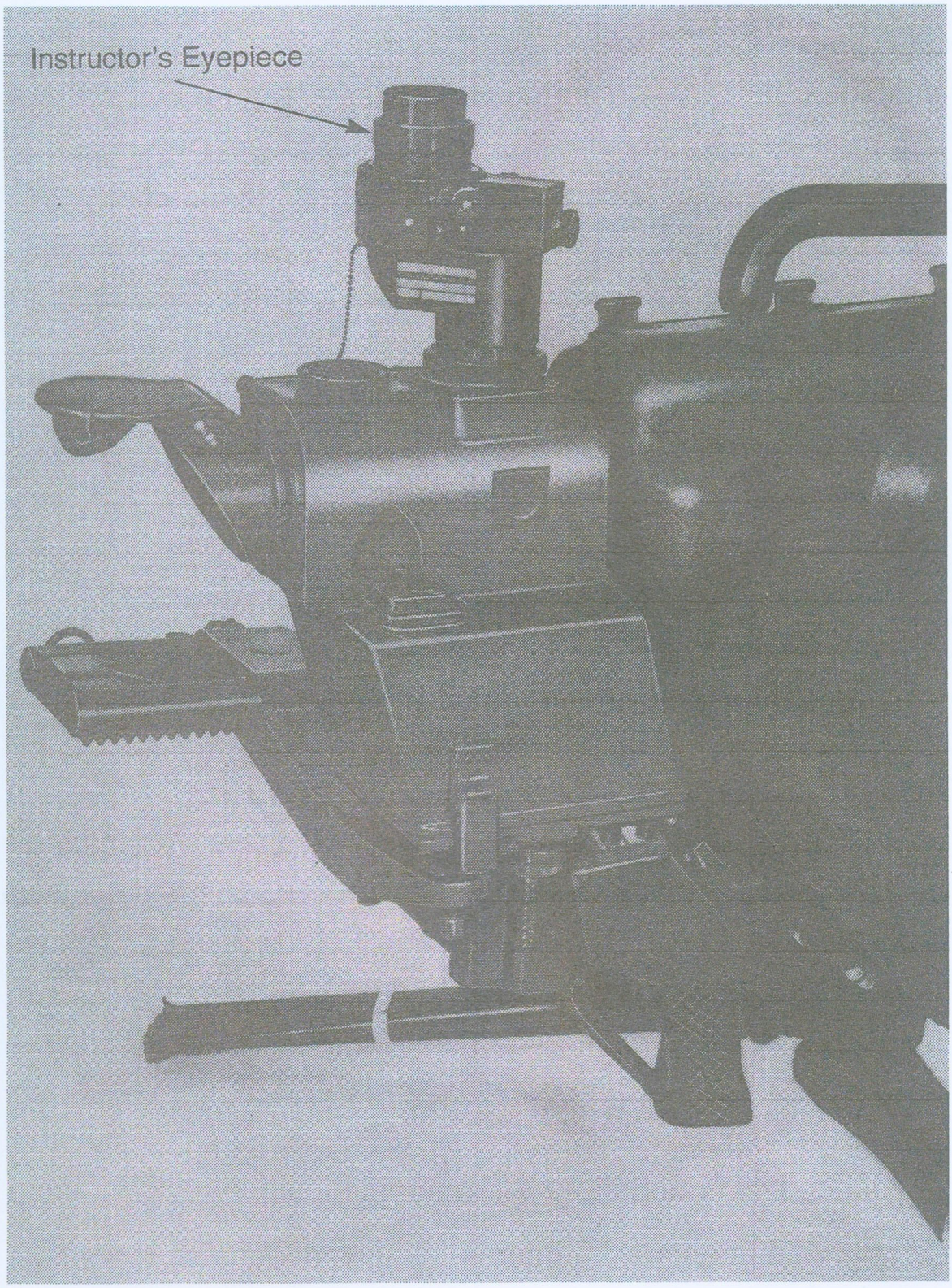

Fig 108 — The Instructor's Eyepiece Fitted

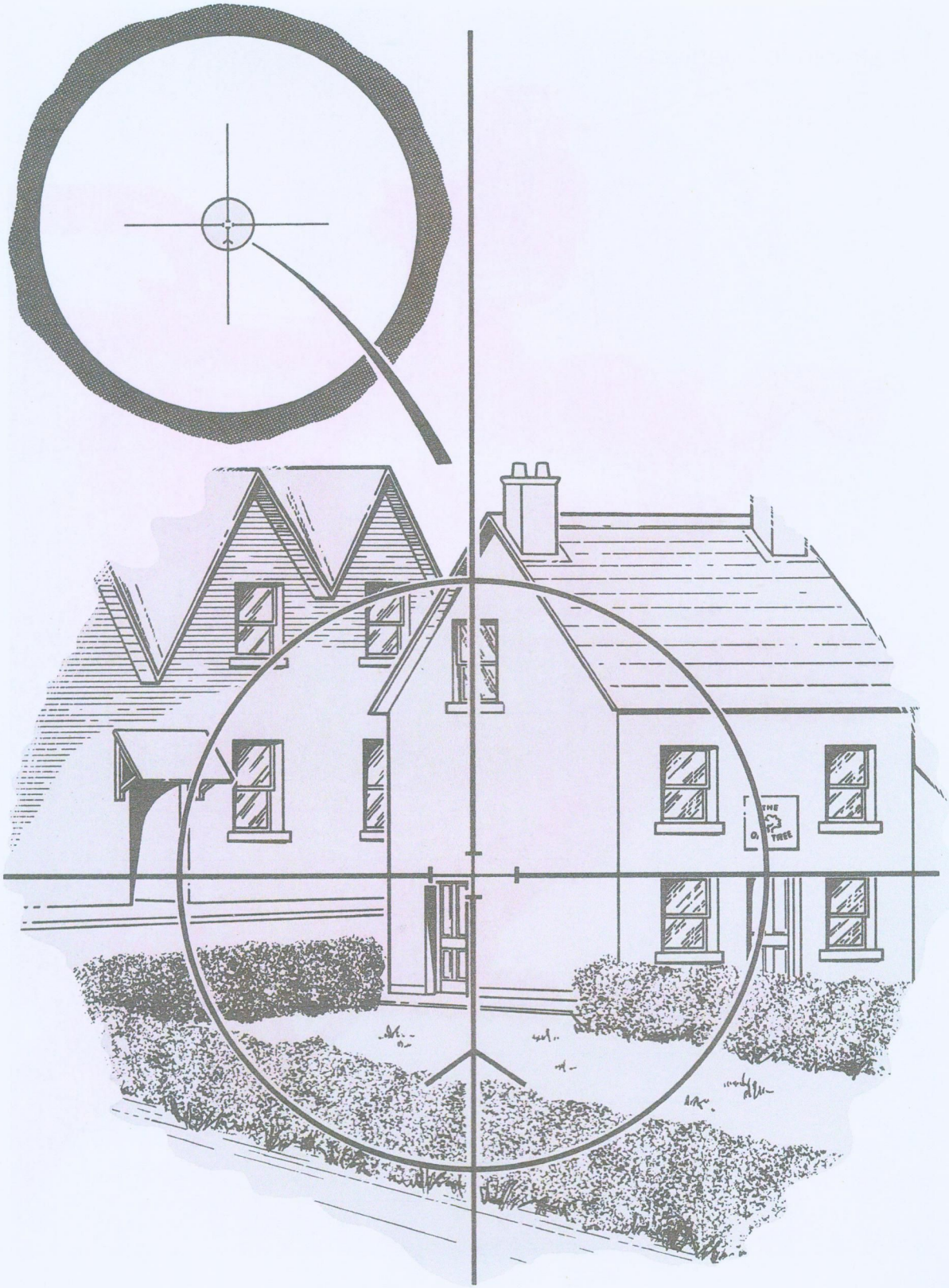

Fig 109 — Tracker Cross Hair/Aiming Point

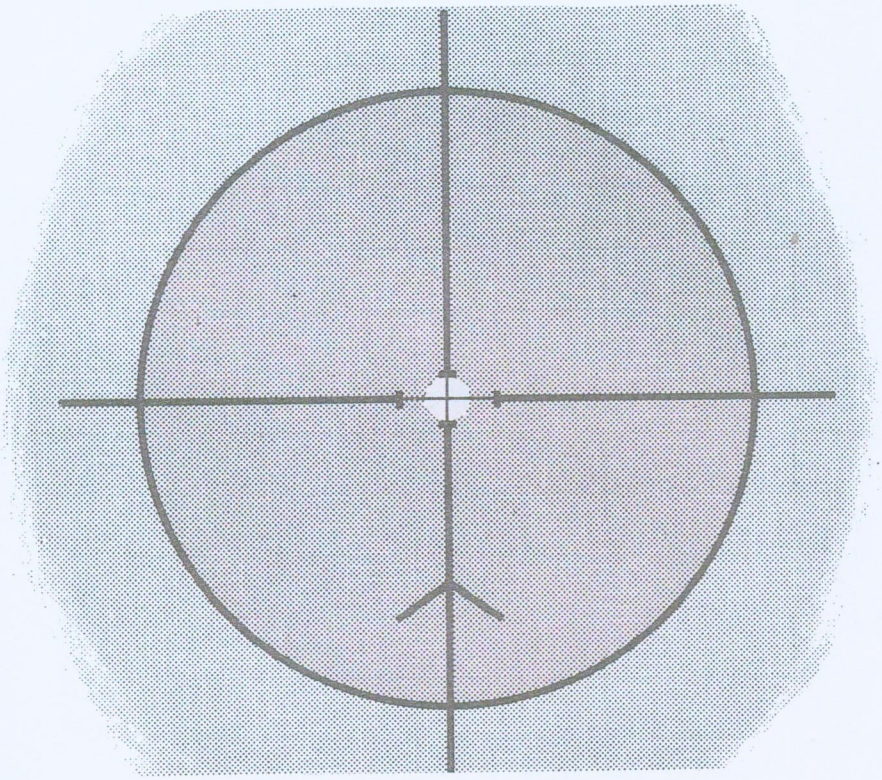

Fig 110. — Spot Adjustment/Tracker

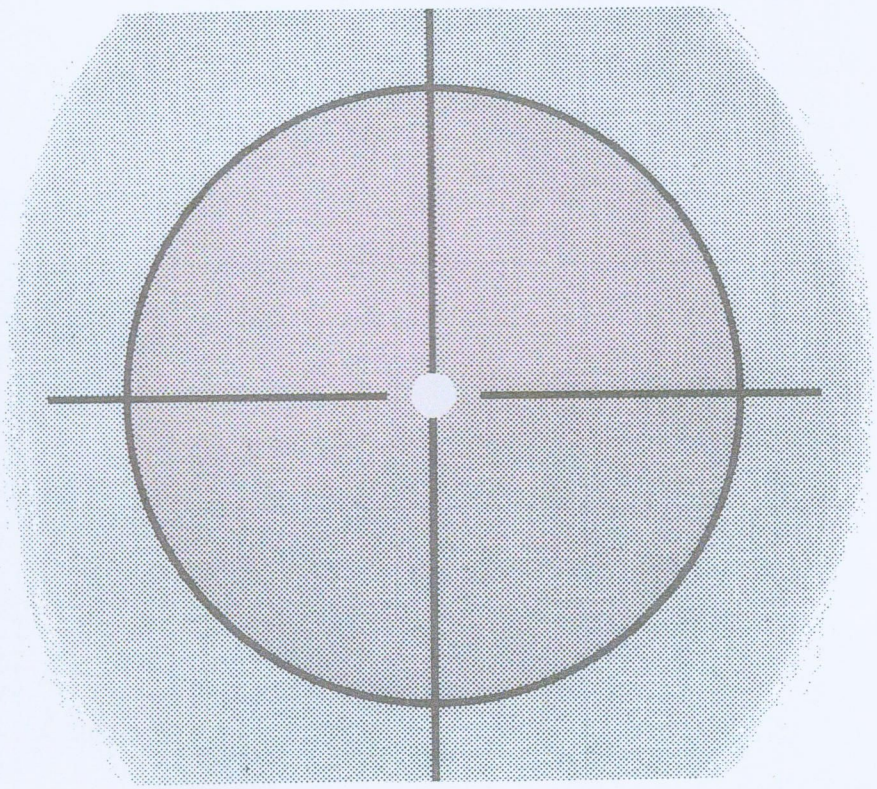

Fig 111. — Spot Adjustment/Instructor's Eyepiece

LESSON 19. — USES OF THE SIMULATOR AND BATTERY CHARGING

A. INSTRUCTOR'S NOTES

0470. ***Aim.*** *To teach:*

a. *How to set up and use the 'Spot' facility.*

b. *How to use the sight control unit.*

c. *How to set up and use the 'Fictive target' facility.*

d. *The method of battery charging.*

0471. ***Timings.*** *Two 40 minute periods.*

0472. ***Method.*** *A basic instructional indoor lesson.*

0473. ***Stores.***

One simulator complete to CES
One firing post

0474. ***Preparation.*** *Simulator logistic containers packed and secured until required. Firing post set up. Seating arranged in a semi-circle.*

0475. ***Miscellaneous.*** *A field of view of at least 30 metres is required for the alignment phase of revision.*

B. CONDUCT OF THE LESSON

Preliminaries

0476. ***Revision.*** *Cover the following points:*

a. *General description of the battery charger.*

b. *Setting up the simulator.*

c. *Aligning.*

d. *Centralizing.*

Introduction

0477. *Explain:* The simulator can be used in either of two modes. When the 'Spot' facility is selected, a light spot simulating the missile tracer flare is produced. Training either indoors on a model layout or in the field using actual targets can be carried out. The 'Fictive target' mode produces an illuminated outline square which can be made to move in any direction at varying speeds. This is designed to practise the firer in tracking targets and can be used indoors, in confined spaces or in the field.

Spot Facility

0478. ***Normal Simulation.*** *Explain and demonstrate:* To condition the equipment for normal simulation with the 'Spot' facility, carry out the following drill:

a. Ensure that the green light on the computer panel is on.

b. Set the 'Spot/Target' switch on the optical unit to 'Spot'.

c. Set the five position switch to 'Normal'.

d. Set the range control knob to the required range.

0479. ***Effect.*** *Explain and demonstrate:* When firing with the above conditions set, the following will occur:

a. When the firing button is pressed, the green light on the computer panel will go out.

b. Approximately one second after pressing the firing button, the landscape viewed through the tracker will deflect six mils downwards. This is to simulate the displacement of weight on the support assembly caused by the missile leaving the tube and the tube being ejected to the rear.

c. The light spot will appear in the tracker field of view and move towards the centre of the reticle as the missile would.

d. When the time of flight of the simulated missile equates to the range setting, the light spot will brighten momentarily to simulate missile impact.

e. Approximately three seconds later, the green light on the computer panel will come on again. This indicates that the simulator is ready to fire again. The time lag is necessary for the computer to reset the initial conditions.

0480. ***Simulation with Smoke.*** *Explain and demonstrate:* To obtain this facility, carry out the following drill:

a. Ensure that the green light on the computer panel is on.

b. Set the five position switch to 'Smoke 1'.

c. Set all other controls to the positions required.

0481. ***Effect.*** *Explain and demonstrate:* When firing with the above conditions set, the following will occur:

a. When the firing button is pressed, the green light on the computer panel will go out.

b. Approximately one second later, the field of view of the tracker will be obscured for 0.500 seconds and at the same time the light spot will dim and become almost invisible. This simulates obscuration on firing caused by the smoke of the missile launch signature.

c. When the field of view has cleared the six mils downward deflection simulating the displacement of weight will have taken place.

d. The remaining sequence of events (paragraph 0479.**c.** to **e.**) will then take place.

0482. ***Effect, Smoke 2.*** *Explain:* If the five position switch is set to 'Smoke 2', two seconds of obscuration will occur on firing. This is the maximum obscuration and simulates the effect occurring in very calm conditions.

0483. *Confirm by questions and practice.*

0484. ***Firing Noise Simulation.*** *Explain:* The firing noise simulation is produced when the five position switch is set at 'Normal', 'Smoke 1' and 'Smoke 2'. The noises simulated are the activation of the missile and the ignition of the gas generator. The headphones must be worn by the firer to hear the full effect.

0485. *Confirm by questions and practice.*

Sight Control Unit

0486. *Explain:* The controls of the sight control unit allow the instructor to assess the tracking ability of individual firers engaging varied targets with either the 'Spot' or the 'Fictive target' facility. The unit records the number of firings and correct firings, i.e., those engagements in which, throughout missile flight, the firer tracks in such a way as to remain within the previously set 'Offset limits'. The unit can be set to assess either the whole trajectory or the last 200 metres. When offset limits are applied the amount of divergence between the 'Spot' or 'Fictive target' and the tracker reticle is established and any movement outside of this caused by erratic tracking is noted and the unit does not record a correct firing.

0487. ***Use with the Spot Facility.*** *Explain and demonstrate:* To use the sight control unit with the 'Spot' facility, operate the equipment as follows:

a. Set up the 'Spot' facility.

b. Switch on the sight control unit.

c. Set the trajectory selector switch as required, i.e., 'Whole trajectory/Last 200 metres'.

d. Set the vertical and horizontal 'Offset limit' switches to the required positions.

e. Set the two counters at zero.

0488. *Confirm by questions and practice.*

Fictive Target Facility

0489. ***Conditioning the Equipment.*** *Explain and demonstrate:* To condition the equipment for the 'Fictive target' facility carry out the following drill:

a. Ensure that the green light on the computer panel is 'On'.

b. Set the 'Spot/Target' switch on the optical unit to 'Target'.

c. Set the five position switch to 'Fictive target'.

d. Set the range control knob to 2000 metres or the range required.

e. Set the brightness control knob as required.

f. Switch on the sight control unit.

g. Set the elevation and azimuth direction and speed regulators at the desired positions.

h. Set the vertical and horizontal 'Offset limit' switches to the required positions.

i. Set the trajectory selector switch to either 'Whole trajectory' or 'Last 200 metres'.

j. Zero the two counters.

0490. ***Effect.*** *Explain and demonstrate:* When the firing button is pressed with the above conditions set, the fictive target will appear in the centre of the field of view of the tracker. It will then move for direction and speed relative to the settings placed on the regulators. Approximately 12.5 seconds later, corresponding to a range of 2000 metres, the sequence is complete. The firings counter will indicate '1' and the

correct firings counter will indicate '1', provided that the firer has not exceeded the previously set offset limits.

0491. *Confirm by questions and practice.*

Night Operation

0492. ***Training.*** *Explain:* When the simulator is used for night training the 'Day/Night' switch on the firing post is set for night operation and the reticle adjusted for brightness. The level of illumination in the instructor's eyepiece must also be adjusted by means of the brightness control on the instructor's eyepiece. Power to illuminate the instructor's eyepiece is supplied by the simulator battery.

0493. *Confirm by questions.*

Battery Charging

0494. ***Occasions.*** *Explain and demonstrate:* Systematic battery charging is not to be carried out as damage to the cells could result. The battery is only to be recharged on indication from the total firings counter on the computer (approximately 600 firings can be obtained from a fully charged battery). For this purpose, a firing log must be maintained.

0495. ***Cycle.*** *Explain:* The battery charger has a completely automatic charging cycle. The charging cycle begins with a rapid and complete discharge of the simulator battery. The whole programme takes approximately seven hours to complete. Thereafter the battery should remain on trickle charge for a further five hours.

0496. ***Charging.*** *Explain and demonstrate:* To charge the battery carry out the following drill:

a. Ensure that the charger is switched off.

b. Connect the battery cable to the charger and the battery.

c. Connect the mains supply cable to the charger and to the mains supply socket.

d. Switch on the mains supply.

e. Switch on the charger.

0497. ***Note.*** *Explain:* The charging cycle will now commence. Whilst charging is in progress, the radiator grill must not be covered or obstructed otherwise the charger will overheat and permanent damage may result.

0498. ***Visual Indication of the Charging Cycle.*** *Explain the following sequence:*

Serial	State	Indication
1	a. Master switch to 'On'. b. Discharge begins.	a. Red 'Mains' power light on. b. Red 'Discharge' light on.
2	a. Discharge complete. b. Charging begins.	a. Red 'Discharge' light off. b. Blue 'Charge' light on.
3	a. 7 hours later, charging complete. b. Trickle charging begins.	a. Blue 'Charge' light off. b. Green 'Trickle' light on.
4	Master switch to 'Off'.	All lights off.

0499. *Confirm by questions.*

04100. ***Battery Charger Safety Devices.*** *Explain:* The following safety devices operate within the charger:

a. If the input mains supply exceeds 280 volts AC, the 1 amp fuse in the charger will blow and the orange 'Fault' light will come on.

b. The orange 'Fault' light will also come on if one of the following occurs:

(1) Mains voltage drops below 220 volts AC.

(2) Connections are faulty.

(3) If the battery is connected to the charger and the charger is switched on before the charger is connected and switched on at the mains socket.

(4) Mains power supply is cut off before the charging cycle is complete.

04101. ***Breaking the Charging Cycle.*** *Explain:* If the charging cycle is in operation and the mains power supply is cut off the 'Fault' light will glow. However, as soon as the mains power supply is restored, the charging cycle will continue from where it left off. If the charging cycle is broken by switching the charger off and then on again, the cycle will begin again from the first operation, i.e., the rapid discharge of the battery.

04102. *Confirm by questions.*

Faults

04103. ***Rectification of Faults.*** *Explain:* If any fault occurs during either simulator operation or battery charging, e.g., lights fail to operate or firing sequences fail to initiate, then all electrical connections are to be checked for correct fitting. If the fault still persists, the unit REME must be informed immediately.

04104. *Confirm by questions.*

Conclusion

04105. ***End of Lesson Drill.***

a. *Confirm the complete lesson.*

b. *Pack kit.*

c. *Summarize the main points.*

d. *Stress the following points:*

(1) *The importance of knowing the correct conditions to set for each facility provided by the simulator in order to ensure realistic simulator training.*

(2) *The importance of the correct sequence when making the connections for battery charging.*

(3) *The importance of keeping the charger radiator grill clear of obstructions whilst recharging.*

LESSON 20. — USES OF THE SIMULATOR WITH MIRA

A. INSTRUCTOR'S NOTES

04106. ***To Teach:***

a. *General Description of the MIRA associated equipment used within the simulator.*

b. *How to fit the equipment to the simulator.*

04107. ***Timings.*** *One 40 minute period*

04108. ***Method.*** *A basic instructional indoor lesson.*

04109. ***Stores.***

One firing post
One simulator complete to CES
One MIRA adapter bracket and counter weight
One MIRA
Air bottles and batteries
One instructor's control optic

04110. ***Preparation.*** *Simulator packed in its logistic container. MIRA and instructor's control optic in their containers but out of sight, firing post assembled. Seating arranged for the squad.*

04111. ***Miscellaneous.*** *A field of view of at least 30 metres is required for the revision phase of the lesson. Three charged reticle illumination batteries fitted.*

B. CONDUCT OF THE LESSON

Preliminaries

04112. ***Safety Precautions.*** *Detail members of the squad to carry out the inspection of bottles and batteries under supervision.*

04113. ***Revision.*** *Cover the following:*

a. *Setting up the simulator.*

b. *Alignment procedure.*

c. *Centralizing procedure.*

Introduction

04114. *Explain:* In order to use the simulator to its maximum potential, soldiers must be coached in target engagements in both visual and thermal modes. All members of the platoon require a thorough knowledge of the equipment that is used to enable the simulator to be used with MIRA and how to set the equipment up so as operators can be coached effectively.

Equipment Description

04115. ***Counter Weight.*** *Explain and demonstrate:* The counter weight is secured to the rear of the simulator's junction box and counteracts the weight of MIRA when fitted to the firing post. A knurled screw and locating block is provided in order to secure the counter weight to the simulator junction box.

04116. ***MIRA Adaptor Bracket.*** *Explain and demonstrate:* The MIRA adaptor bracket is similar in shape and design to the MIRA mounting bracket. However, the forward edge of the bracket has been extended to allow the MIRA to be positioned in front of the optical block. There is no circular housing for fitting of the tracker's lens cover. The elevation adjuster consists of a 17 millimetre hexagonal nut which also incorporates the locating stud of the forward leg. The azimuth adjuster consists of a 13 millimetre hexagonal bolt on the side of the rearward locking mechanism. The rearward locking mechanism is similar in construction, however it is operated laterally and there is no securing device.

04117. ***Instructor's Control Optic.*** *Explain:* The instructor's control optic enables the instructor to observe and coach the firer's aiming and tracking skills using the simulator with MIRA.

The Logistic Container

04118. *Explain and demonstrate:* The logistic container houses the instructor's control optic and protects it during storage and transit. It is made of a reinforced plastic and when fully packed has a weight of 17.5 kilogrammes. Stencilled on the lid and one side is the following information: The designation MILAN Instructor's Control Optic, NATO stock number, shipping and storage container number and manufacturer's details. On all sides and the lid are stencilled Fragile Optical Unit. On both ends there is a spring loaded carrying handle. On one side only is a pressure release valve and humidity indicator. The lid is secured to the body by eight quick release catches. On the lid are six male mouldings. These correspond with one large female moulding on the underside of the body to assist in stacking. Lid positioning marks on the lid and the body indicate the correct positioning of the lid when fitted correctly.

04119. *Confirm by questions.*

Unpacking and Packing of the Instructor's Control Optic

04120. ***Unpacking.*** *Explain and demonstrate:* If necessary operate the pressure release valve and unfasten the eight quick release catches, the lid can be removed. Inside the logistic container and lid is a white moulded padding, this acts as a shock absorber to protect the equipment. A recess in the lid is fitted with a rubber moulding. At the side of the moulding is a desiccant bag, a lens cleaning cloth and brush are also provided. The two main components of the instructor's control optic are housed in individual recesses in the moulding. The observer's adaptor is removed first followed by the mounting assembly.

04121. ***Packing.*** *Explain and demonstrate:* The mounting assembly is to be replaced first. Place the clamp over the top of the clamping bracket and tighten the tightening screw. Release all three clamping levers so that the clamping bracket and mounting bracket can move freely on the metal plate. Move the mounting bracket in such a way that the eyepiece is uppermost and then manipulate the mounting bracket until it conforms to the shape of the recess in the padding. Place the mounting bracket into the recess with the lens end leading, at the same time place the clamping bracket into its recess. The observer's adaptor can now be replaced, ensuring that the observer's eyepiece fits in its recess correctly. Replace the lid and secure the catches.

04122. *Confirm by practice. End with the container unpacked.*

Components

04123. ***Description.*** *Explain and demonstrate:* The instructor's control optic comprises of two main components:

a. Mounting assembly.

b. Observer's adaptor.

04124. ***The Mounting Assembly*** (*see* Fig 112). *Explain and demonstrate:* The mounting assembly is clamped to the side of the support assembly on the firing post by means of a clamp with tightening screw and clamping bracket. A recess on the lower part of the clamping bracket conforms to the shape of the support assembly on the firing post. A threaded socket on the side of the clamping bracket receives the protective cap with threaded spigot from the lens. An indicator mark, key way and painted symbols assist in the correct positioning and security of the instructor's adaptor to the mounting bracket. Situated on the mounting bracket is a firer's eyepiece and manufacturer's plate. The mounting bracket and clamping bracket are secured to a metal plate by means of three clamp levers.

04125. *Confirm by questions.*

04126. ***The Observer's Adaptor*** (*see* Fig 113). *Explain and demonstrate:* The observer's adaptor fits directly on to the lens of the mounting bracket by means of a key, indicator mark and securing ring. When not fitted to the mounting assembly, the lens of the observer's adaptor is fitted with a protective cap. At the end of the observer's adaptor is an observer's eyepiece with focussing ring, rubber surround and bung. A manufacturer's plate is fitted. The field of view as seen through the observer's eyepiece is reduced with a magnification of x 1.5

04127. *Confirm by questions.*

Fitting MIRA to the Firing Post

04128. ***Preparation of the Equipment.*** *Explain:* Before MIRA is fitted, ensure that the computer is switched off and the tracker lens cover is removed from the optical unit. Remove the instructor's eyepiece, and ensure that three charged reticle illumination batteries are fitted to the firing post..

04129. ***Attaching the Counter Weight.*** *Explain and demonstrate:* To attach the counter weight, loosen the screw so that only one thread is showing and slide the counter weight so that the locating block fits into the recess on the underside of the junction box, secure hand tight. To remove, loosen the screw and move the counter weight rearwards.

04130. *Confirm by practice. End with the counter weight fitted.*

04131. ***Fitting the MIRA Adaptor Bracket.*** *Explain and demonstrate:* The bracket is fitted to the firing post in the same way as the mounting bracket (*see* paragraph 0250).

04132. *Confirm by questions and practice and end with the bracket fitted.*

04133. ***Fitting MIRA to the MIRA Adaptor Bracket.*** *Explain:* MIRA is attached to the adaptor bracket in the same way as it is to the MIRA mounting bracket.

04134. ***Removing MIRA from the Adaptor Bracket.*** *Explain and demonstrate:* Remove MIRA from the adaptor bracket in the following sequence:

a. Ensure that both front covers are closed.

b. Grasp the carrying handle.

c. Push the release catch on the adaptor bracket to the right.

d. Push forward on the carrying handle until the MIRA is clear of the bracket.

e. Replace the bung in the bellows.

f. Replace the lens protective cover on to the front of the optical unit.

04135. *Confirm by practice and end with MIRA fitted to the adaptor bracket.*

04136. ***Air Bottles, Batteries and Covers.*** *Explain:* The operation of protective covers, fitting and removal of air bottles and batteries is as already taught.

04137. *Confirm by questions and practice, ending with a bottle and battery fitted, the covers open and the daylight filter in the raised position.*

Operating MIRA

04138. ***Adjustments.*** *Explain:* Conditioning, switching on, use of controls and application of the thermal image to the reticle is as already taught. Adjustments for elevation are made on the 17 millimetre hexagonal nut and may require adjustments to be made to the tightness of the securing hook. Azimuth adjustments are made on the 13 millimetre hexagonal nut. Adjustments are made using the tools provided in the simulator equipment.

Fitting the Instructor's Control Optic

04139. ***Preparation of the Firing Post.*** *Explain:* Before the equipment is fitted ensure that MIRA is switched off, raise both protective covers and the daylight filter. Remove the rubber bung from the firer's eyepiece and turn it so that it is positioned to the left. Remove the instructor's control optic from its logistic container.

04140. ***Attaching the Mounting Assembly*** (*see* Fig 114). *Explain and demonstrate:* To fit the mounting assembly:

a. Release the following:

(1) Tightening screw on the clamp.

(2) The three clamp levers.

b. Check that the clamping bracket and mounting bracket move freely on the metal plate.

c. Place the lower recess of the clamping bracket under the lower tube of the support assembly. Locate the clamp over the top of the support assembly so that the carrying handle fits into the recess and tighten the tightening screw hand tight.

d. Move the mounting bracket so the eyepiece fits over and into the firer's eyepiece of the tracker, ensuring that it fits as closely as possible to the lens of the tracker.

e. Lock the clamp levers.

f. Remove the protective cap from the lens and fit it to the threaded socket on the side of the clamping lever.

04141. ***Removing the Mounting Assembly.*** *Explain and demonstrate:*

a. Unscrew the protective cap from the clamping bracket and replace it on to the lens.

b. Release the three clamping levers.

c. Release the tightening screw on the clamp.

d. Remove the clamp from the top of the support assembly.

e. Move the mounting assembly clear of the support assembly.

f. Replace the rubber bung in the firer's eyepiece.

g. Close the daylight filter and protective covers on MIRA.

04142. *Confirm by practice. End with the mounting assembly fitted to the firing post.*

04143. ***Attaching the Observer's Adaptor*** (*see* Fig 115). *Explain and demonstrate:* Attach the observer's adaptor in the following sequence:

a. Remove the protective cap from the lens of the observer's adaptor and secure to the protective cap of the mounting bracket.

b. Ensure that both markings on the mounting bracket and observer's adaptor are aligned so that the key on the observer's adaptor fits into the keyway on the mounting bracket.

c. Turn the securing ring clockwise in the direction indicated by the symbol on the mounting bracket until the observer's adaptor is secure.

d. Remove the rubber bung from the observer's eyepiece and focus the field of view.

e. Look through the instructor's eyepiece and check the position of the field of view in relation to the reticle. If adjustment is required, carry out the following procedure:

(1) Unlock the clamp levers.

(2) Manipulate the observer's adaptor until the field of view through the observer's eyepiece is central over the reticle.

(3) Maintaining its position, secure the clamp levers.

(4) Check back through the firer's eyepiece.

(5) If any further adjustment is required, repeat the procedure.

f. To ensure a good thermal picture, no visual light should be allowed to enter through the observer's adaptor as this could override the thermal picture.

04144. ***Removing the Observer's Adaptor.*** *Explain and demonstrate:* To remove the observer's adaptor carry out the following drill:

a. Replace the rubber bung in the observer's eyepiece.

b. Unscrew the securing ring by turning the ring anti-clockwise as indicated by the symbol. Disengage the observer's adaptor from the mounting bracket.

c. Unscrew the protective cap from the cap on the side of the clamping bracket and refit to the lens.

04145. *Confirm by practice. End with the observer's adaptor fitted to the mounting bracket.*

Dismantling the Complete Equipment

04146. *Explain:* Ensure that MIRA is switched off. Remove the observer's adaptor then the mounting assembly as previously taught. The remainder of the equipment can be dismantled as taught (*see* paragraph 0467).

Conclusion

04147. ***End of Lesson Drill.***

a. *Confirm the complete lesson.*

b. *Pack kit.*

c. *Summarize the main points.*

d. *Stress the importance of the following:*

(1) *The correct positioning of the eyepiece so that the reticle pattern in the tracker appears in the centre of the field of view.*

(2) *When a thermal picture is required, no visual light should enter through the observer's adaptor thereby overriding the thermal picture.*

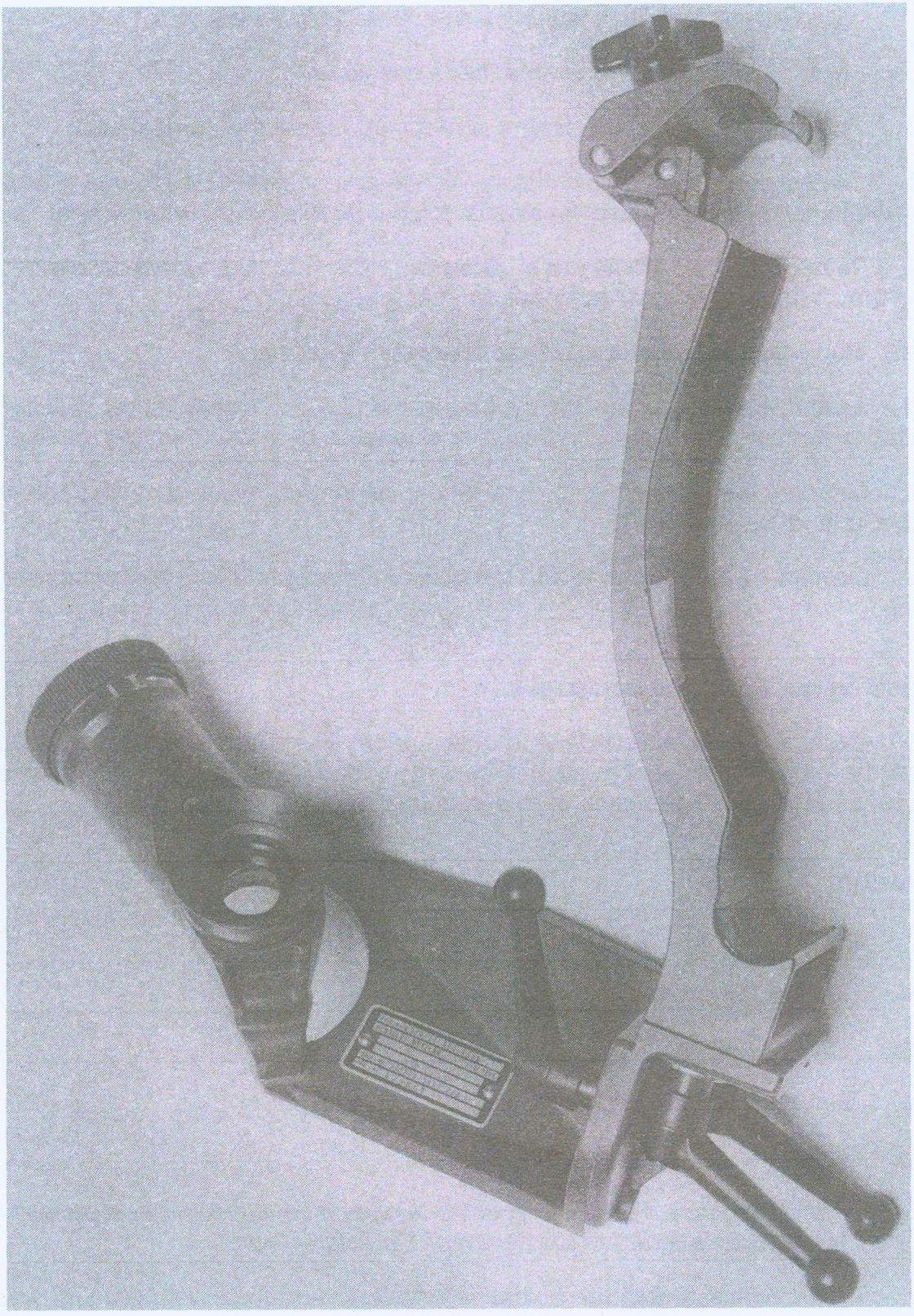

Fig 112. — The Mounting Assembly

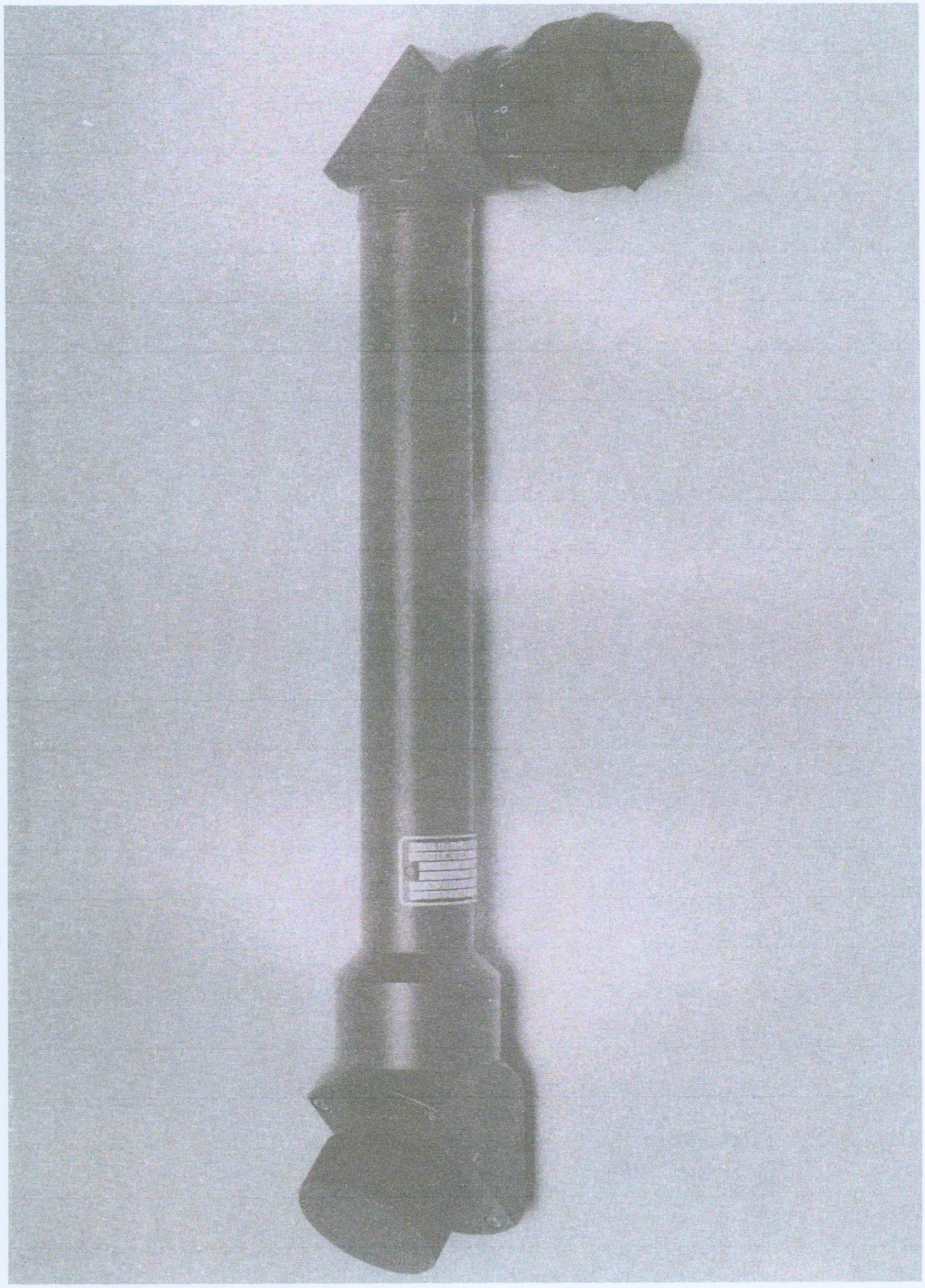

Fig 113. — The Observer's Adapter

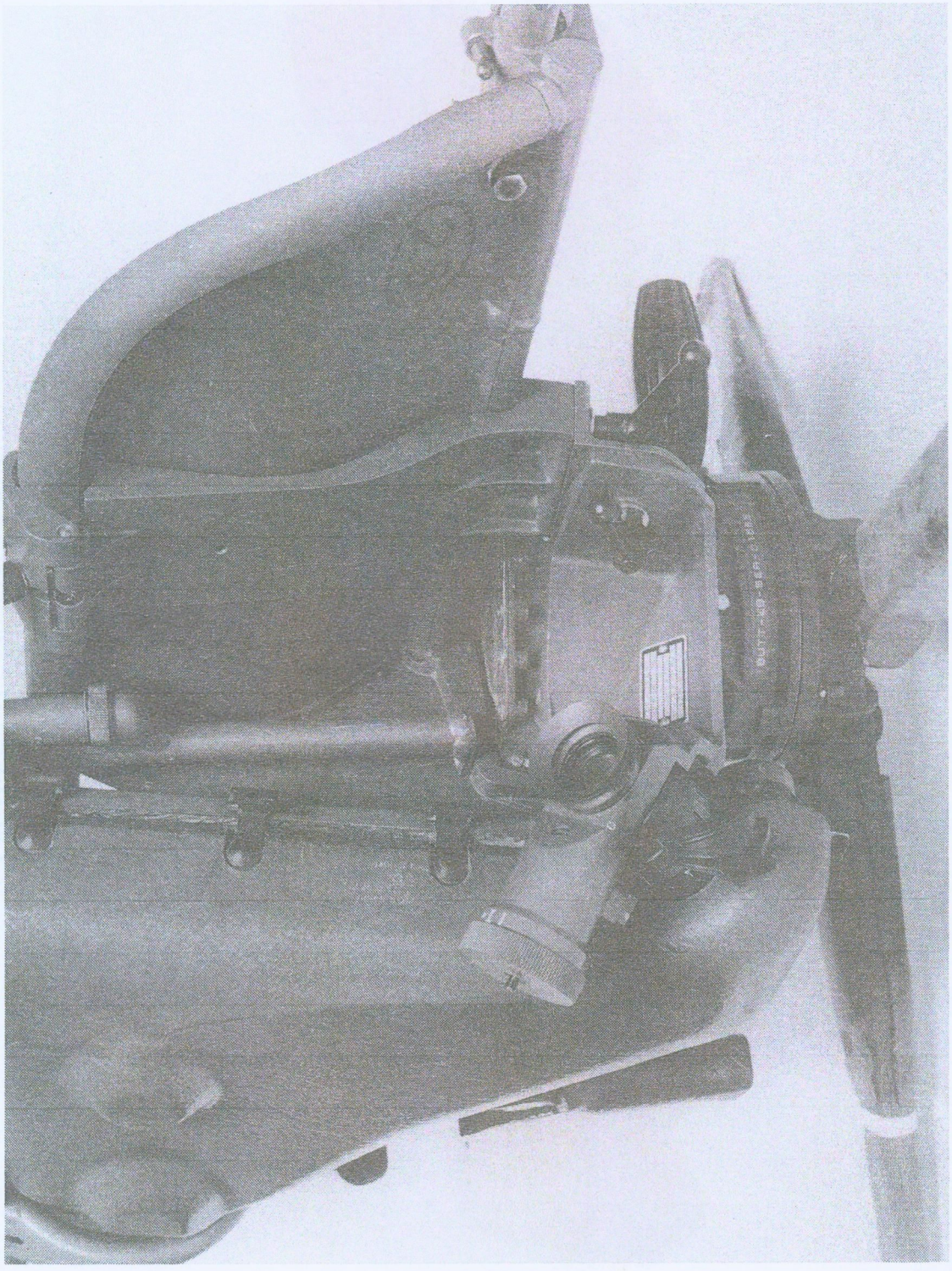

Fig 114. — Attaching the Mounting Assembly

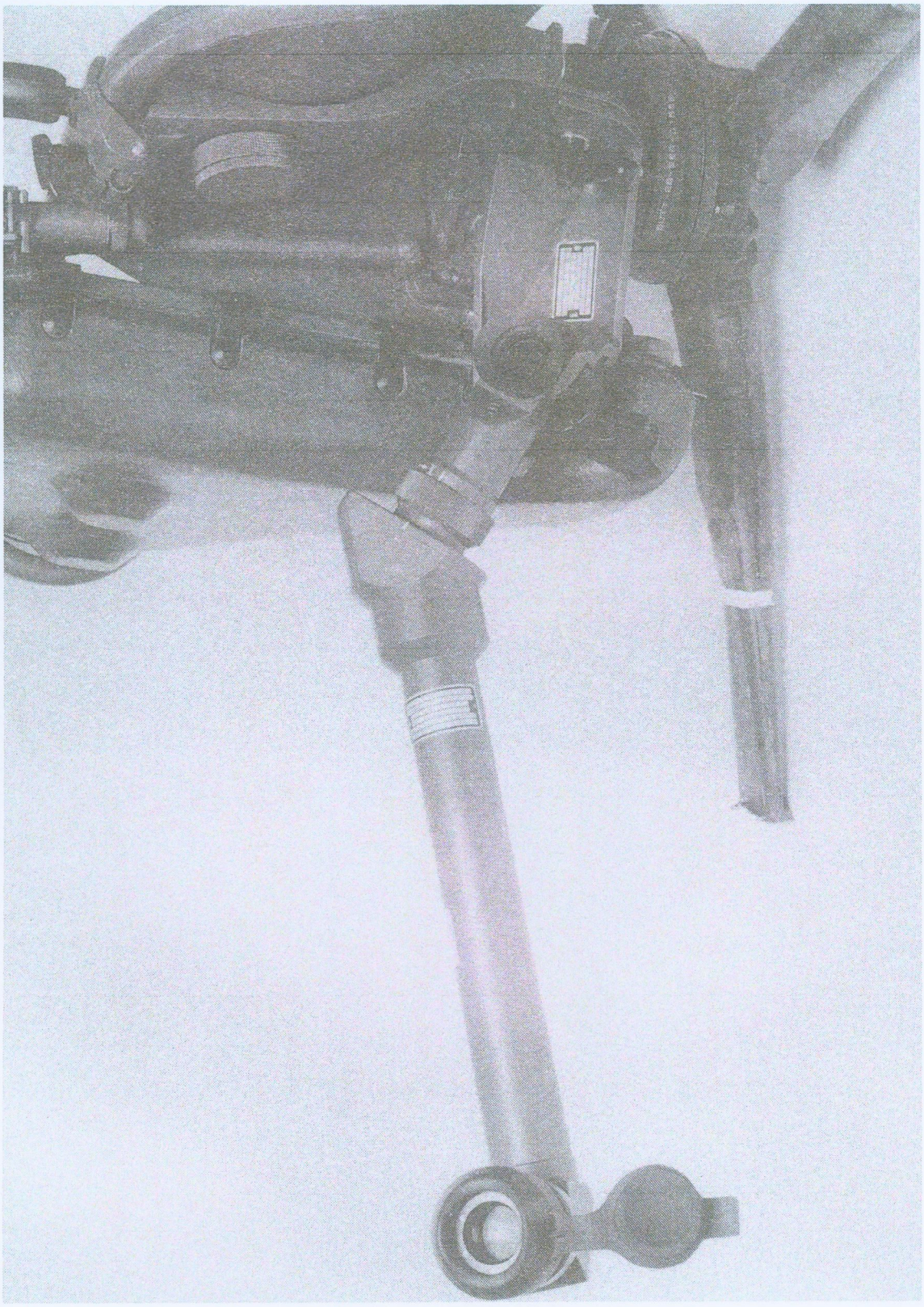

Fig 115. — Attaching the Observer's Adaptor

LESSON 21. — BATTLE CARDS, COORDINATION TEMPLATES AND COORDINATION BOARDS

A. INSTRUCTOR'S NOTES

04148. ***Aim.*** *To teach the layout and information recorded on:*

a. *The battle card.*

b. *The coordination template.*

c. *The coordination board*

04149. ***Timings.*** *One 40 minute period.*

04150. ***Method.*** *A basic instructional indoor lesson.*

04151. ***Stores.***

One battle card (AF B9922)
One coordination board
One set of coloured superfine permanent pens
One permanent pen eraser
One prismatic/silva compass
One protractor
One set of binoculars
One 1:50,000 scale map
Vufoil of:
Battle card with flips to show stages of construction
Coordination template with flips to show stages of construction
Coordination board to show stages of construction
One sheet of graph paper

04152. ***Preparation.*** *All stores are to be at hand but out of sight of the squad.*

04153. ***Miscellaneous.*** *Ideally this period should be conducted immediately prior to a practical battle card/coordination template teaching exercise.*

B. CONDUCT OF THE LESSON

Preliminaries

04154. *Reserved.*

Introduction

04155. *Explain:* In order to be able to send accurate contact reports and quickly identify killing areas and dead ground, it is essential that all members of the platoon can accurately record information onto a battle card, coordination template or coordination board.

Battle Card/Coordination Template

04156. ***Description.*** *Explain:* The battle card and coordination template is a publication available through service channels using code AF B9922. It consists of a thin perspex material which is gridded in 1:25,000 scale, 5 kilometres across and 4 kilometres deep. A space is left to the right hand side onto which the user can make notes.

04157. ***Equipment.*** *Explain:* The following equipment is required to produce an accurate battle card/coordination template:

a. Prismatic/silva compass for taking bearings to confirm ground features from the map.

b. Protractor in order to plot accurate topographical information from map to battle card/coordination template.

c. Binoculars to assist in identification of features and dead ground.

d. Map.

e. Selection of different coloured superfine permanent pens.

f. Permanent pen eraser.

g. Battle card/coordination template AF B9922.

04158. *Confirm by questions.*

04159. ***Information Recorded on a Battle Card.*** *Explain and demonstrate:* The battle card is used by the detachment commander and No 1 to record information relevant to their arcs of fire. Much of the information is gained from the section commander's brief and should always include the following:

a. *Map Coordinates.* Taken straight from the map.

b. *Own Weapon Position.* Eight figure grid taken from the section commander's brief.

c. *Arc of Fire.* The area of ground into which you are responsible for observing, taken from the section commander's brief.

d. *Near and Far Limits.* The nearest and furthest point you would expect to engage a target. These would normally be as close as possible to 400 and 1950 metres. However, this will depend on the ground and will be given in the section commander's brief.

e. *Reference Points.* As selected by the section commander and should be prominent in both visual and TI. Reference points are to be common throughout the detachment.

f. *Dead Ground.* Any area of ground within your arc of fire into which you are unable to see or direct fire. Dead ground is to be assessed from tracker height and confirmed by careful study of contour lines to plot accurately.

g. *Obstacles to Armour.* Woods, minefields, rivers, etc.

h. *Other MILAN Positions.* The position and arc of fire of any MILAN in your detachment is to be plotted.

i. *Direction of the Main Tank Threat.* Taken from the section commander's brief.

j. *Mutually Support Weapons.* Positions of any supporting tanks, etc., should be plotted.

04160. Once this information is plotted, the user should add his name, callsign and the date. Any additional information such as grids of positions and a key to information should be entered in the space to the right. At the bottom should be scribed a diagram of the stadia lines in order to plot any CAP of the MIRA covering that area. A completed battle card is at Fig 116.

04161. ***Markings and Colours.*** *Explain and demonstrate:* There are no laid down colours, etc., to be used but units should standardize a system within the platoon. A suggested format is as follows:

a. Topographical information to be the same as used on the map.

b. Use of standard military symbols.

c. Own position is plotted as a dot with arcs of fire and killing areas as solid black lines.

d. Near and far limits in black.

e. *Direction of Main Tank Threat.* To be indicated by a red arrow pointing in the required direction.

f. *Dead Ground.* Plotted in brown and shaded.

g. *Obstacles to Armour.* Minefields and destroyed areas in green and using standard military symbols.

h. *Other MILAN Positions.* As for own positions except use broken lines for arcs.

i. *Mutually Supporting Weapons.* These are plotted in blue (including mobile MILAN).

04162. ***Information Recorded on the Coordination Template.*** *Explain and demonstrate:* The coordination template is used by the section commander to show the area of ground which his section is providing anti-armour fire into killing areas. The template is also used by the platoon commander to extract information from, in order to coordinate and identify gaps in the battle group's anti-armour plan. Accuracy is, therefore, essential and must include the following:

a. Map coordinates.

b. *MILAN Positions.* The position of every firing post in the section should be shown as a dot.

c. *Killing Areas.* These are taken from the platoon commander's original anti-armour plan. No arcs of fire are recorded.

d. Direction of the main tank threat.

e. *Reference Points.* These should be mutual with other sections if killing areas overlap and need to be prominent objects in both visual and TI.

f. *Dead Ground.* This must be plotted accurately in order to show any area of ground within the killing areas that cannot be covered by MILAN. The platoon commander will extract this information for his coordination board in order to identify any weakness in the overall plan.

g. Obstacles.

h. Mutually supporting weapons.

i. Sufficient map detail to make the template readable without being cluttered.

04163. Once this information is plotted, the user should record his name, the date and his callsign. Killing areas should be numbered in accordance with the platoon commander's plan and all MILAN positions should be numbered and the eight figure grid of each position recorded in the space provided on the right side of the template. A completed example of a coordination template is at Fig 117.

04164. ***Information Recorded on the Coordination Board.*** *Explain and demonstrate:* The coordination board is used by the platoon commander to coordi-

nate the battle group's anti-armour plan and identify any weakness. It also provides an excellent aid when giving briefs on the plan. A suggested construction is as follows:

a. A firm base is required on which to write. The size of the board should be large enough for a battle group deployment allowing for mutual support on the flanks. This is normally about 12 kilometres by 11 kilometres. The board should have a white area that is gridded to a scale of 1:25,000 then covered in perspex and sealed to prevent ingress of water. A space should be allowed on the right hand side of the board for information such as: enemy, grouping tasks and remarks, priority of engagement, orders for opening fire and notes.

b. A series of three or four clear flexible overlays should be provided onto which the following information should be recorded:

(1) Grid coordinates.

(2) Sufficient map detail to make the template readable without being cluttered.

(3) Boundaries.

(4) Obstacles.

(5) Enemy routes.

(6) Killing areas.

(7) Dead ground.

(8) Weapon positions.

c. Once the section commander has sited in detail, you may find that the killing areas on the original plan have changed. The amended killing areas and dead ground should be taken from the section commander's coordination template. This information should be recorded on a separate overlay to avoid rubbing out information if changes are required.

04165. When all adjustments have been made, you will require to produce copies on talc for higher formation, flanking units and company commanders. The operations officer and commanding officer may require a copy for their maps.

Conclusion

04166. ***End of Lesson Drill.***

a. *Confirm the complete lesson.*

b. *Pack kit.*

c. *Summarize the main points.*

d. *Stress the following points:*

(1) *The importance of accurate map reading.*

(2) *The importance of checking dead ground from tracker height.*

(3) *The importance of accuracy for plotting all information.*

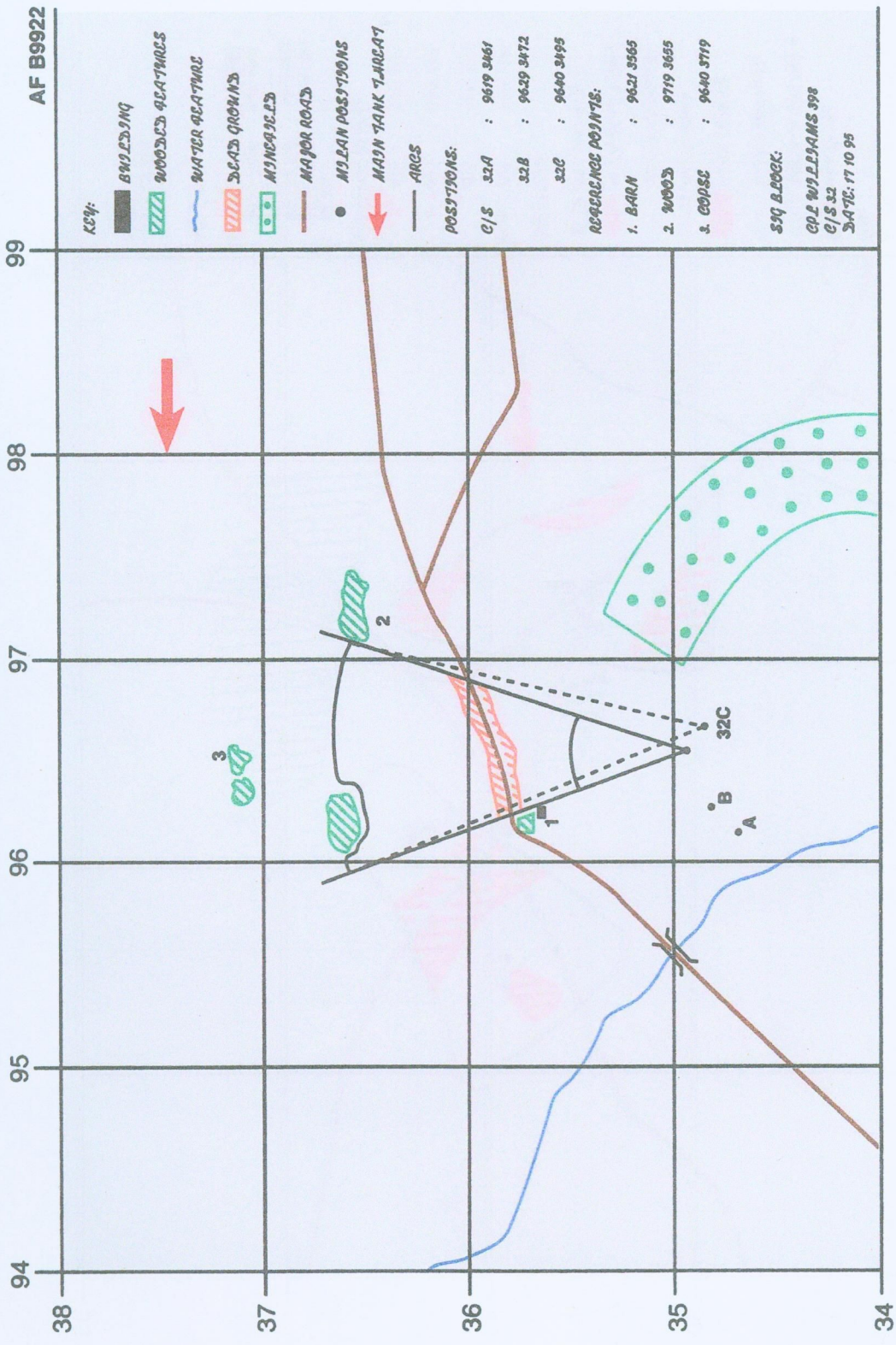

Fig 116. — Example of a Completed Battle Card

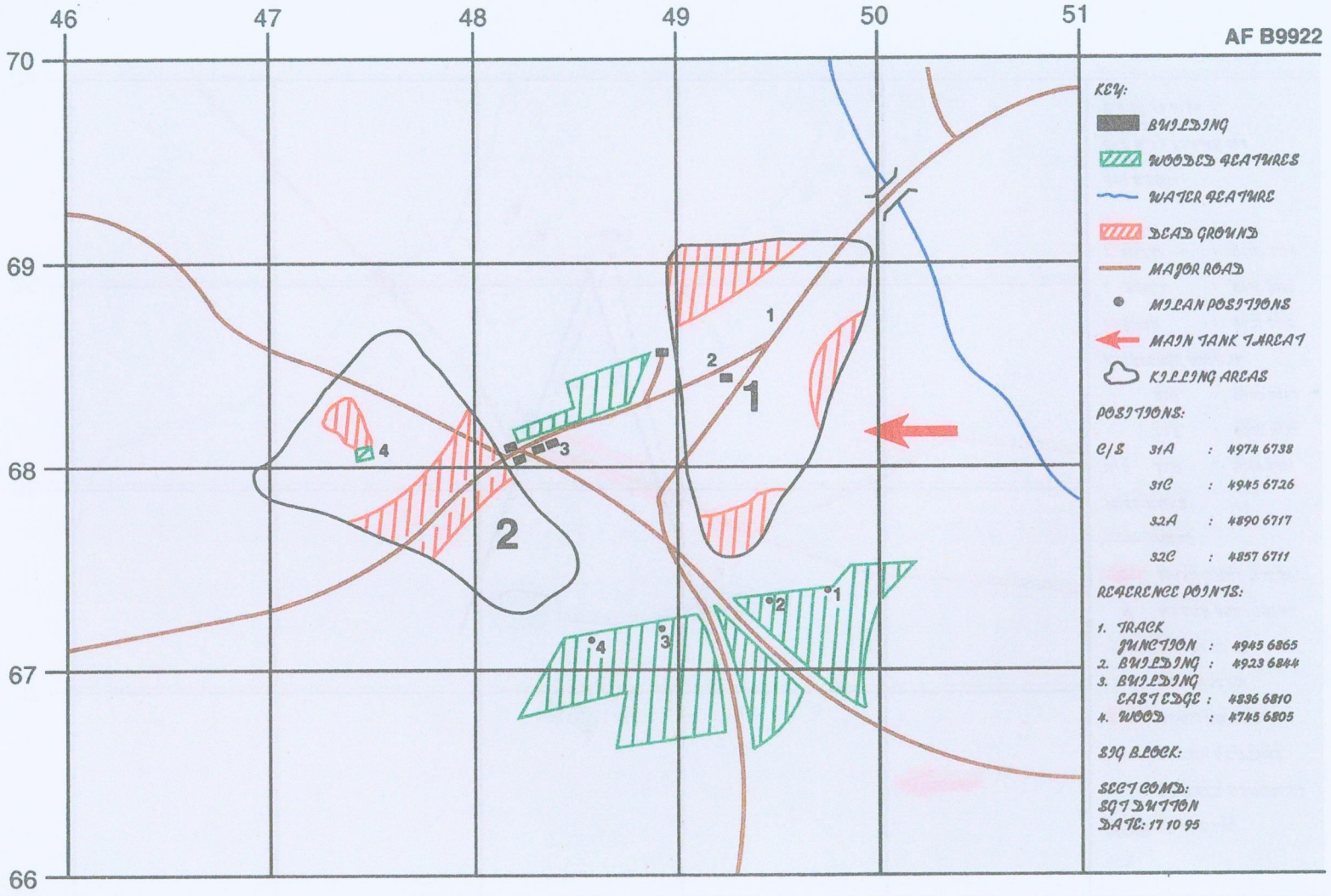

Fig 117. — Example of a Completed Coordination Template

Chapter 5

TRAINING

SECTION 1. — GENERAL

Introduction

0501. Preparation for war requires a great deal of training. Whilst it is not possible to simulate battlefield conditions under all circumstances, the more realistic the training,the better all will be prepared. Realism in training also generally has the effect of making it interesting.

0502. Training is the most important function carried out in peacetime. Because it can assume lesser priority when the threat is not obvious, commanders at all levels must take active steps to ensure that it is carried out.

0503. MILAN is a very simple weapon to handle and fire and the training emphasis must therefore be on the tactical skills which will ensure that it is invariably used to best effect.

SECTION 2. — TACTICAL TRAINING

Introduction

0504. Tactical training is just as important as weapon training but it is much more difficult to assess and test. Tactics is a relative skill in which it is rarely possible to say that a solution is definitely right or definitely wrong.

0505. Effective tactical training is therefore reliant on a clear understanding of the principles to be applied, combined with an ability to apply them flexibly in accordance with the situation and the ground. This is a skill in which the instructor requires experience and practice if he is to be successful.

Tactical Exercises Without Troops — TEWTs

0506. TEWTs are a very economical way of training personnel who must make decisions in war. Much better training value can be gained from formation training exercises if officers and NCOs have been practised in their tactical skills on TEWTs. They can be carried out on a number of occasions. For example during formal platoon training, during cadres, when NCOs are free but the soldiers are on duty, or even in lulls in formation training exercises.

0507. MILAN is the weapon system around which battle group positional defence is normally sited, and MILAN TEWTs can exercise any level of command from battle group down to individual firing post. A well planned TEWT can exercise all levels of command in sequence — thus making the best use of the selected ground.

0508. TEWTs can be formal or informal. Detailed TEWTs with comprehensive instructions are normally only found at schools of instruction and in connection with promotion examinations. Successful TEWTs can, however, be run with a minimum of paperwork provided that there is a clear aim and well briefed and qualified directing staff. The publication, Training for War, Pamphlet No. 3, Collective Training (Army Code No. 71290), explains the conduct of TEWTS in detail. The following is a summary of the preparation sequence.

Method

0509. A suggested method of compiling a TEWT is as follows:

a. *Select the Aim.* It must be relevant and achievable:

(1) Examples are:

(a) To study how enemy forces would deploy to attack . . .

(b) To discuss the battle procedure and sequence of events for the deployment of the mobile section in the withdrawal.

(c) To produce an anti-armour plan for a battle group.

(d) To practise section commanders in siting MILAN positions for their MILAN detachments and the subsequent co-ordination of the plan.

(2) From the aim it is possible to deduce:

(a) The rank of the soldiers.

(b) The likely number and necessary qualifications of directing staff.

(c) The type and size of ground required.

(d) The time necessary to conduct the TEWT.

b. *Find Suitable Ground.*

(1) If a training area is suitable it should only be necessary to book the area.

(2) If private land is to be used:

(a) Official clearance through Defence Land Agent/443 procedures is necessary.

(b) Liaison with farmers/owners is probably necessary.

(c) Restrictions must be spelled out. Roads, tracks, paths, farmland.

(d) All participants must obey The Country Code.

(e) Courtesy letters of thanks may be required after use.

c. *Write the Scenario.* Based on the aim, the likely operational guidelines, and likely enemy tactics.

d. *Personnel.* Decide the participation, and degree of involvement:

(1) Confined to platoon members.

(2) Involving other battalion personalities.

(3) Involving personnel from outside the battalion.

e. *Plan the Reconnaissance.*

(1) Aims.

(2) Duration — aim for the inside of a working day.

(3) Participation — as in d. above.

(4) Phases and timings for each problem must be thoroughly discussed with all directing staff on the ground.

(5) Administration.

f. *Construct the TEWT Programme.*

(1) Aim.

(2) Method.

(3) Number of problems: locations, timings needed to set, reconnaissance, consider and discuss the problems.

(4) Include supplementary questions such as:

(a) Would it be different at night?

(b) What if the crops had just been harvested?

(5) Always remember to discuss matters which we are bad at practising:

(a) Procedures when casualties are incurred.

(b) Resupply — methods, timings, responsibilities.

(c) Lack of communications.

(6) Administration — vehicles, equipment, feeding.

g. *Staff Work.* Prepare as elaborately as thought necessary to achieve the aim:

(1) Traces.

(2) *Covering Letter and Programme.* Include here any necessary preparatory work to be carried out by participants.

(3) *Scenario and Problems.* Problems are normally distributed by directing staff on the ground.

(4) *Directing Staff Notes.* Limited distribution.

h. *Conclusion.* A TEWT should be an enjoyable day out. It is one of those rare forms of training where a pint of beer at midday is to be encouraged. It helps to loosen tongues and increase the informality and therefore the learning potential of the day.

Direct Fire Weapons Effect Simulator — DFWES

0510. DFWES (*see* Fig 118) is a tactical validator. It allows MILAN teams to test how effective they are against enemy vehicles and how long they are able to survive when engaging them.

0511. Examination of the results of DFWES engagements should reveal any flaws in the anti-armour plan, or the coordination of the plan, and the effectiveness of the detailed siting of MILAN, and any deception measures taken. It is thus a very useful tool to the platoon commander in the tactical training of the MILAN platoon.

0512. DFWES is a complementary training system. It is not a substitute for either the DX143 simulator or for the live firing of MILAN. All simulators have their limitations and false lessons can be learned from their use. The best use of DFWES is as a tactical validator only.

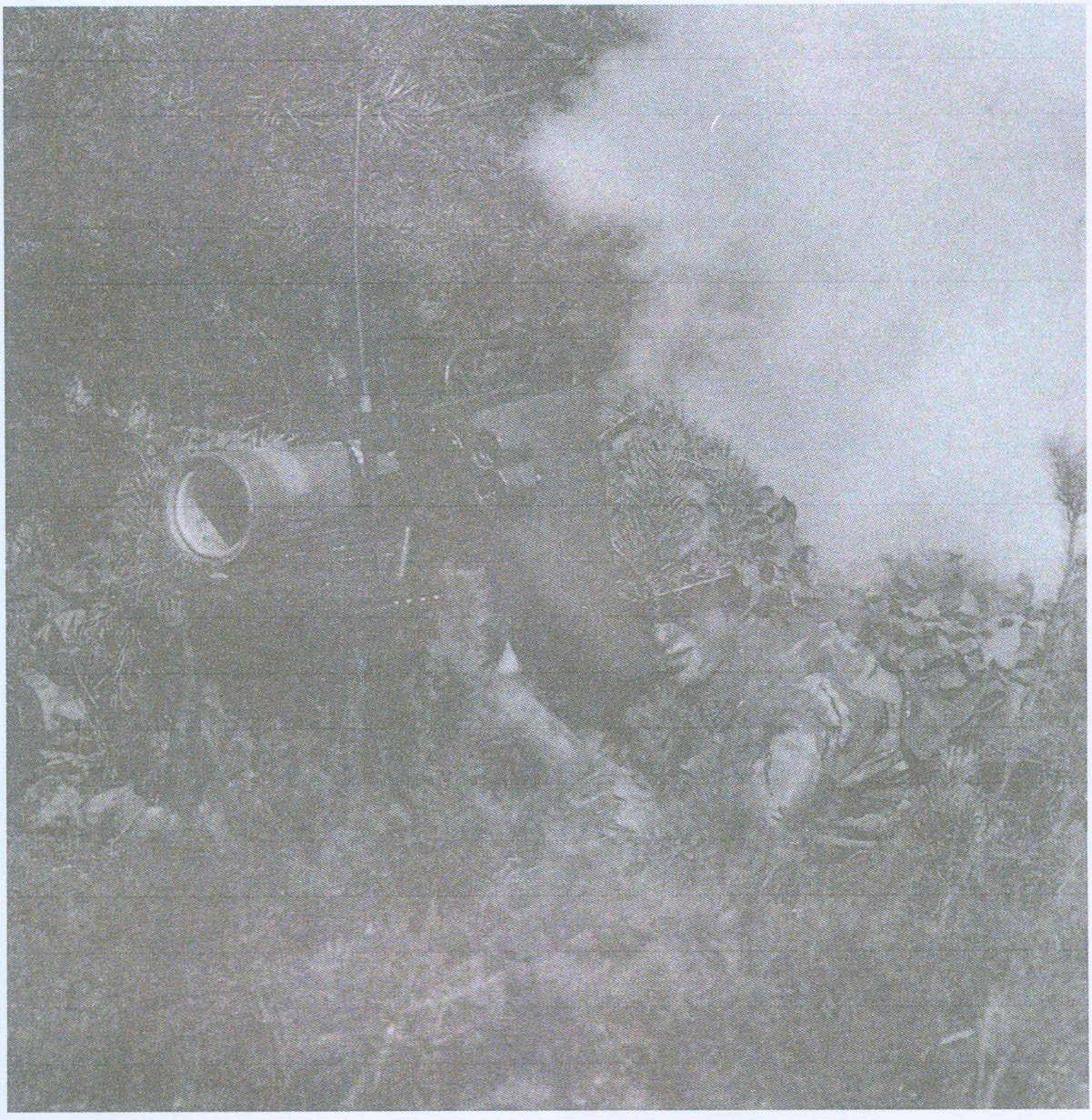

Fig 118. — MILAN Direct Fire Weapon Effects Simulator

SECTION 3. — HELICOPTER HANDLING

Introduction

0513. Due to the portability of MILAN, operations with helicopters within a battle zone are very likely to occur in any future major conflict. It is important, therefore, that all members of MILAN platoons are trained and practised in all aspects of helicopter operations.

0514. Helicopter drills and procedures for land operations are contained in the following publications:

a. Use of Helicopters in Land Operations, ATP 49.

b. Helicopter Aide Memoire, Army Code No. 70746.

SECTION 4. — FIRE CONTROL TRAINING

Introduction

0515. Fire control is a very important aspect of MILAN platoon training. Until recently, it was difficult to conduct realistic fire control training, but with the introduction of micro-models to AFV identification, it can now be run simply and cheaply.

Fire Control Lessons

0516. MILAN operators are to be taught their unit's method of fire control and its application in all situations. A suggested sequence of instruction is as follows:

a. Lecture. Reasons for Fire Control.

b. Lesson 1. A basic lesson using chalkboard, vufoil or static model. It should include factors affecting fire control, use of two firing posts, keypoint, Kenny concept and lead vehicle method with and without priority of engagement from various directions starting initially with direct crossing targets.

c. Lesson 2. Using a moving fire control trainer with two simulators. Dealing with basic fire control, with no priority of engagement. However, bear in mind rules for target engagement. The main aim is to select the correct target. Targets should initially start left to right or right to left at greater ranges. As students progress, the direction of the targets can be varied from diagonal crossers to head on and at closer ranges.

d. Lesson 3. As per Lesson 2. However, the student can be made more aware of the 75 mil rule which can be reflected in the trainer progressing onto pre-aiming and decoy at various ranges.

e. Lesson 4. As per Lesson 3, but within a battle exercise setting. Initially with no NBC, then at a later date up to 3 Romeo. Priority of engagement should be considered but not to the extent of slowing down the rate of fire.

f. Lesson 5. As per Lesson 4, but using live vehicles.

Fire Control Exercises

0518. ***Introduction.***

a. In order to ensure that the best possible use is made of MILAN on the battlefield, it is important that the detachment commanders and MILAN operators are practised in identification and decision making under realistic conditions, and under stress.

b. The exercise is easily set up and organized and requires no extra platoon stores.

c. The exercise can be run as a competition.

0519. A number of skills can be incorporated in the simplest fire control exercise, such as:

a. Orders/briefs.

b. Basic battle skills including NBC.

c. Communications.

d. AFV identification.

e. Fire control and practical engagement skills.

f. Contact reports.

g. Simulator training.

0520. The conduct of the exercise can be simple or elaborate, even to the stage where a battle exercise is built around the fire control test. If this is done, the exercise should be conducted as it would normally be, but the scoring system should be heavily weighted in favour of teams who do well in fire control.

0521. To carry out an exercise of this type it is only necessary to provide a landscape model and micro-models to represent the desired formation. Battle cards must be made out, and a section commander's brief given. Teams being exercised should engage the micro-models with simulators, and be marked against a scoring system worked out on the basis of correct priority of engagement and method of fire control, accuracy of tracking and engagement.

0522. At Figs 119 and 120 are diagrams of models which can be constructed cheaply by unit pioneers which will enable a moving target fire control exercise to be conducted. There are a number of ways in which this model can be elaborated upon, depending on the imagination of the users.

0523. ***The Okeefe Trainer*** (*see* Figs 121 and 122). This provides a realistic, low cost fire control trainer which can be used to teach and test fire control against a moving formation, and also allows decoy and 75 mil rule problems to be assessed. The trainer is easily portable and allows the instructor to stop individual targets once engaged. Variety is easily achieved by altering the terrain board, size and composition of the formation. Details of construction are available on request from the Anti-Tank Division, ITC, WTC.

0524. ***Conduct of Exercise.*** One possible format for an exercise is as follows:

a. *Phase 1.* Battle picture including orders for killing area, priority of engagement and orders for opening fire given to the operator.

b. *Phase 2.* Lead up to exercise to include stress and fatigue, e.g., live firing battle exercise/test, battle fitness test, infantry combat fitness test, assault course, etc.

c. *Phase 3.*

(1) Teams take up positions behind simulators (previously set up and tested); authority for opening fire is given.

(2) Target array revealed to team.

(3) Engagement begins.

(4) Casualty imposed on No. 1 after one minute. No. 2 automatically takes over firing post.

(5) Cease firing after a further one minute.

(6) Section commander sends SITREP over the radio.

(7) Exercise ends — debrief teams. (Example of scoring is below.)

0524. ***Scoring.***

Detachment	Fire Control (HPS — 80) 20 per correct engagement	Hit/Miss (HPS — 20) 5 per hit	Total HPS — 100
31A			
31B			
32A			

0525. ***Stores.***

1 x Moving target fire control board/Okeefe trainer
2 x MILAN firing posts
2 x MILAN simulators
2 x Corrective lens
2 x Radio
Various 1/300 scale models (to represent the enemy formation)

0526. ***Dress.***

CEFO
NBC suits
Respirators

0527. ***Layout for Fire Control Exercise.*** Stores should be laid out as in Fig 120.

The Testing of Fire Control

0528. An example of a Fire Control Test is as follows. The Test details are shown between the pecked lines on each page, e.g.,

RESTRICTED

ANTI-TANK PLATOON

1ST BATTALION THE LOAMSHIRE REGIMENT

FIRE CONTROL TEST

EXERCISE CROSS HAIR

NOVEMBER 1990

Waterloo Barracks
Colchester

RESTRICTED

FIRE CONTROL TEST

TABLE OF CONTENTS

Serial	Annex	Details	First Page	Last Page	Paper Colour
		Cover Sheet	i		WHITE
		Table of Contents	ii		WHITE
1		General Instructions	1–1	1–2	WHITE
	A	Timetable of Events	1A–1		WHITE
2		Test Directors Brief	2–1	2–2	WHITE
	A	Scoring System	2A–1		WHITE
	B	Orders	2B–1		WHITE
	C	Battle Picture	2C–1		WHITE
	D	Section Commander's Brief	2D–1		WHITE
	E	Supporting Troops Instructions	2E–1		WHITE
	F	Radio Net Diagram	2F–1		WHITE
	G	Notes for Supervisors	2G–1		WHITE
3		Concurrent Activity	3–1		WHITE

RESTRICTED

SERIAL 1 TO
FIRE CONTROL TEST

General Instructions

1. These instructions cover the arrangements of the Fire Control Test for MILAN Detachment Numbers. The Exercise will be conducted on a model layout in full NBC kit.

Aim

2. The aim of the Fire Control Test is to test the MILAN Detachments in their reaction to Anti-Armour Fire Control orders.

Conduct

3. The Test is in three parts:

a. *Part 1.* Introduction and briefing by the Test Director which will include the following:

(1) NSP's, Approach and Aim.

(2) The Scoring System.

(3) Orders.

(4) Section Commander's Brief.

b. *Part 2.* The Test.

c. *Part 3.* Debrief and Scoring.

4. ***Dress and Equipment.***

a. *Dress.* CEFO, NBC State 3.

b. *Equipment.* Notebook and Pencil. (Notebook to be made out with the relevant headings to accept Orders and a Section Commander's Brief.)

1–1
RESTRICTED

RESTRICTED

5. ***Stores.*** The following stores are required for the Fire Control Test:

a. 2 x Firing Posts.)
b. 2 x Simulators.) Complete to CES

c. 2 x 7 metre Corrective Lenses.

d. 3 x PRC 350 Radios (1 spare).

e. 3 x Binoculars.

f. 1 x Rifle (per soldier).

g. 20 x Sandbags.

h. 10 x Camouflage Nets.

i. Completed Battle Card (1 per firing post).

j. 1 x Chalkboard and Easel.

k. Various Coloured Chalks and Duster.

l. Model Layout.

m. Micro Models in 1:300 scale, to be laid out in relevant numbers and types of vehicle to the enemy formation being used.

n. 2 x Chatham Arches or stores to simulate overhead protection.

RESTRICTED

ANNEX A TO SERIAL 1
TO FIRE CONTROL TEST

Timetable of Events

Serial	Time	Event	Location	Action by	Remarks
1	H–1 hr	Breakfast	Cookhouse	SQMS	
2	H–30 mins	Draw Weapons	Armoury	Armscote Storeman	
3	H–10 mins	Parade	Pl Lines	Pl Sgt	All members of Pl to bring notebooks and pencils
4	H–5 mins	Arrive Test Area	Test Area	Pl Sgt	
5	H Hour	Briefing	Test Area	Test Director	Central brief to Pl
6	H+20 mins	Test Starts	Test Area	Test Director	
7	H+3 hrs 30 mins	Test Ends	Test Area	Test Director	Consolidate results
8	H+3 hrs 45 mins	Summary and Debrief	Test Area	Test Director	Results and standards achieved
9	H+4 hrs	Dispersal	Pl Lines	Pl Sgt	

1A–1
RESTRICTED

RESTRICTED

SERIAL 2 TO
FIRE CONTROL TEST

Test Director's Brief

1. ***NSPs.***

2. ***Approach.*** In battle the successful defence of the battle group area will to a large degree be determined by the detachment's ability to recognize and identify targets as per their priority of engagement. All must be capable of carrying out these tasks in an NBC environment.

3. ***Aim.*** The aim of the test is to test the detachment in applying practically any orders received concerning fire control and AFV identification.

4. ***Organization.***

a. *Ground.* Point out the following areas and what will happen at each:

(1) Briefing area.

(2) Battle preparation area

(3) Test area.

(4) Debriefing area.

(5) Concurrent activity area.

b. *Conduct.* When the briefing is over the first detachment will move to the battle preparation area where you will have 20 minutes to carry out final battle preparation. The enemy threat is from the east and a sentry has been provided by 1 Pl. You will be collected by your section commander and taken to the test area where you will receive the battle picture as at Annex C to Serial 2. The remainder should move to the concurrent activity area. The detachment commander is to be issued a section commander's brief as at Annex D to Serial 2. Team members should have a completed battle card by their respective firing posts. The detachment commander will be expected to issue a brief to his teams including his fire control orders as per unit SOPs. NBC state '3 Romeo' should then be ordered by the supervisors and the authority for opening fire given. Detachments should then engage targets as per the priority of engagement. Supervisors should observe through the optical unit and ensure that:

2–1
RESTRICTED

RESTRICTED

(1) Targets engaged are within the arcs.

(2) Pre-aiming is carried out.

(3) During the engagement a previously destroyed target does not fall within the 20 mil sensing field.

c. *Contact Report.* After six engagements per team the detachment commander should send a contact report giving details of targets destroyed using the correct designations so that AFV identification can be assessed. The supervisors should then order "Test ends". This procedure is repeated until all detachments have been tested.

5. ***Scoring System.*** This is done using a chalkboard as at Annex A to Serial 2. Points will be awarded as follows:

a. *Priorities.* For hits on targets within the killing area,

Highest priority vehicle	—	Ten points
Second priority vehicle	—	Seven points
Third priority vehicle	—	Five points
Fourth priority vehicle	—	Three points

b. *Exceptions.* If the 75 mil rule or a decoy problem prohibit the engagement of the highest priority vehicle, then the next highest will score ten points, the next seven points, etc.

c. Targets are to be engaged as soon as the order to fire has been given and the enemy is inside the killing area.

6. ***Orders.*** See Annex B to Serial 2.

2–2
RESTRICTED

RESTRICTED

ANNEX A TO SERIAL 2
TO FIRE CONTROL TEST

Scoring System HPS 200 Pass 180

C/S	Contact Report and Brief	AFV Identification	Fire Control	Total	Pass/Fail
	20	60	120		

Scoring.

1. Deduct one mark for each error or omission in contact report and brief.

2. Deduct five marks for each incorrect identification of targets.

3. Deduct ten marks from total for each missed engagement including lack of pre-aim procedure.

4. Targets:

Priority 1	—	10 points
Priority 2	—	7 points
Priority 3	—	5 points
Priority 4	—	3 points

2A–1
RESTRICTED

RESTRICTED

ANNEX B TO SERIAL 2
TO FIRE CONTROL TEST

Tank Organization

No 1 Section	—	Normal
Atts	—	C5 41 Complete
Dets	—	Nil

Orders

1. ***Enemy and Ground.*** Explain using a chalkboard sketch of the model layout that it is gently undulating, with scattered villages, fields and some hedgerows. Good tank country. The enemy crossed the border last night and are advancing rapidly. Intelligence reports that due to the massive build up of enemy armour to the east of this position a tank battalion attack on the battle group area is imminent. Enemy morale is extremely high due to recent successes. They are equipped with T64A and BMP and are at 85% battle efficiency.

2. ***Friendly Forces.*** B and C Company are forming blocking positions to the north and south in order to channel the enemy into A company killing areas. Your detachment is attached to A company and is waiting to be called forward to the company area. Mobile MILAN in support.

3. ***Mission.*** No 1 section is to occupy a defensive position at . . . by 2200 hours. They are to destroy enemy within killing areas in order to prevent enemy penetration of the battle group area.

4. ***Execution.***

   a. *Concept of Operations.* No 1 section is to deploy to previously occupied and constructed positions and reconnoitre fire positions for secondary killing areas. Main effort: destruction of enemy within existing killing areas.

   b. *Mission/Tasks.* CS . . . is to move with their section commander and occupy a previously prepared defensive position at GD . . . by . . . hours. In accordance with your orders for fire control you are to destroy enemy with killing areas in order to prevent enemy penetration of the battle group area.

2B–1
RESTRICTED

RESTRICTED

5. ***Service Support.*** The section commander will brief you on ammunition replenishment and feeding on the position.

6. ***Command and Signals.*** Section commander's location at A company HQ. All contact reports through company HQ callsign 10.

Battle group HQ — Grid reference

Frequency —

Password — AA — DD

Time Check.

7. ***Questions.***

2B–2
RESTRICTED

RESTRICTED

ANNEX C TO SERIAL 2
TO FIRE CONTROL TEST

Battle Picture

"Remember the situation, you have just arrived at your position within A company. The tank battalion attack is expected shortly from the East.

"I have had time to make out battle cards for you and they are positioned by the posts, so orientate yourself and, using the cards, identify your arcs of fire and limits of opening fire.

"Secondary killing areas have been reconnoitred. I will brief you on them later."

2C–1
RESTRICTED

RESTRICTED

ANNEX D TO SERIAL 2
TO FIRE CONTROL TEST

Section Commander's Brief

GR of Position	123456
Arcs	As shown on the battle cards
Killing Areas	(Point out)
ETA of Enemy	Imminent
Company Layout	1 Pl — Right forward 2 Pl — Left forward 3 Pl — Depth Coy HQ — To the rear
Limits of Opening Fire	400 metres to maximum range
Authority for Opening Fire	When enemy AFVs enter killing areas, in accordance with priority of engagement
Main Tank Threat	East to West(Point out)
Priority of Engagement	COMD — T64K, BTR 60 TACP (3), 1 V 12 AD VEHS — ZSU 23/4 TANKS APCs
Line	Already established to company HQ
Mutual Support	Two mobile sections complete in the area of 1 platoon

2D–1
RESTRICTED

RESTRICTED

ANNEX E TO SERIAL 2
TO FIRE CONTROL TEST

Supporting Troops' Instructions

1. ***Radio Operator.***

   a. *Location.* To the rear and out of sight of the test area.

   b. *Composition.* Platoon Sergeant.

   c. *Dress and Equipment.* Normal working dress manning PRC 350 radio, set to 'Whisper' mode.

   d. *Action.* The radio is to be set to the same frequency as the detachment commander's undergoing the test. He is to act as the radio operator callsign 10 and acknowledge any transmissions sent to him by the detachment commander.

RESTRICTED

ANNEX F TO SERIAL 2
TO FIRE CONTROL TEST

Radio Net Diagram

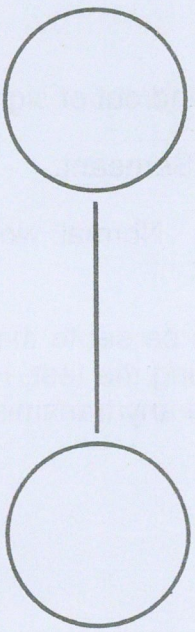

1. ***Frequency.***
   - **a.** F1.. . . . .
   - **b.** F2.. . . . .
2. Frequency 2 is spare for the test.

2F–1
RESTRICTED

RESTRICTED

ANNEX G TO SERIAL 2
TO FIRE CONTROL TEST

Notes for Supervisors

General

1. When each detachment arrives at the test area they are to be given the battle picture as at Annex C to Serial 2.

2. The detachment commander is then to be taken aside, and given the section commander's brief as at Annex D to Serial 2.

3. The detachment commander should then be ordered to quickly test his communications to callsign 10 and then brief and deploy his detachment into the fire positions.

4. No assistance is to be offered or given throughout the duration of the test.

5. After six engagements the Supervisor is to inform the detachment commander that No. 1s are injured, No. 2s are to take over.

6. When 12 engagements are complete the order *"Test ends"* is to be given.

7. On completion the detachment are to be taken to the debriefing area and debriefed using the chalkboard made out as at Annex A to Serial 2.

8. The Supervisor must keep a note of major points that have gone wrong on the test to pass to the Test Director for the summary at the end.

2G–1
RESTRICTED

RESTRICTED

SERIAL 3 TO
FIRE CONTROL TEST

Concurrent Activity

General

1. Three activity stands will be run concurrently with the fire control test as follows:

   a. NBC decontamination.

   b. MIRA battle cards.

   c. Artillery/mortar target indication.

2. Each activity is to last for up to 25 minutes and is to be planned and written by the NCOs nominated.

Reconnaissance

3. A reconnaissance will take place prior to the test during which activity supervisors will discuss their stores requirements with the exercise director.

Conduct

4. The change round procedure will be issued on the day of the test. Each group will carry a copy. Normal safety precautions on all weapons are to be carried out at the start of each activity.

Reporting

5. A report on the progress of each group will be required at the end of the day.

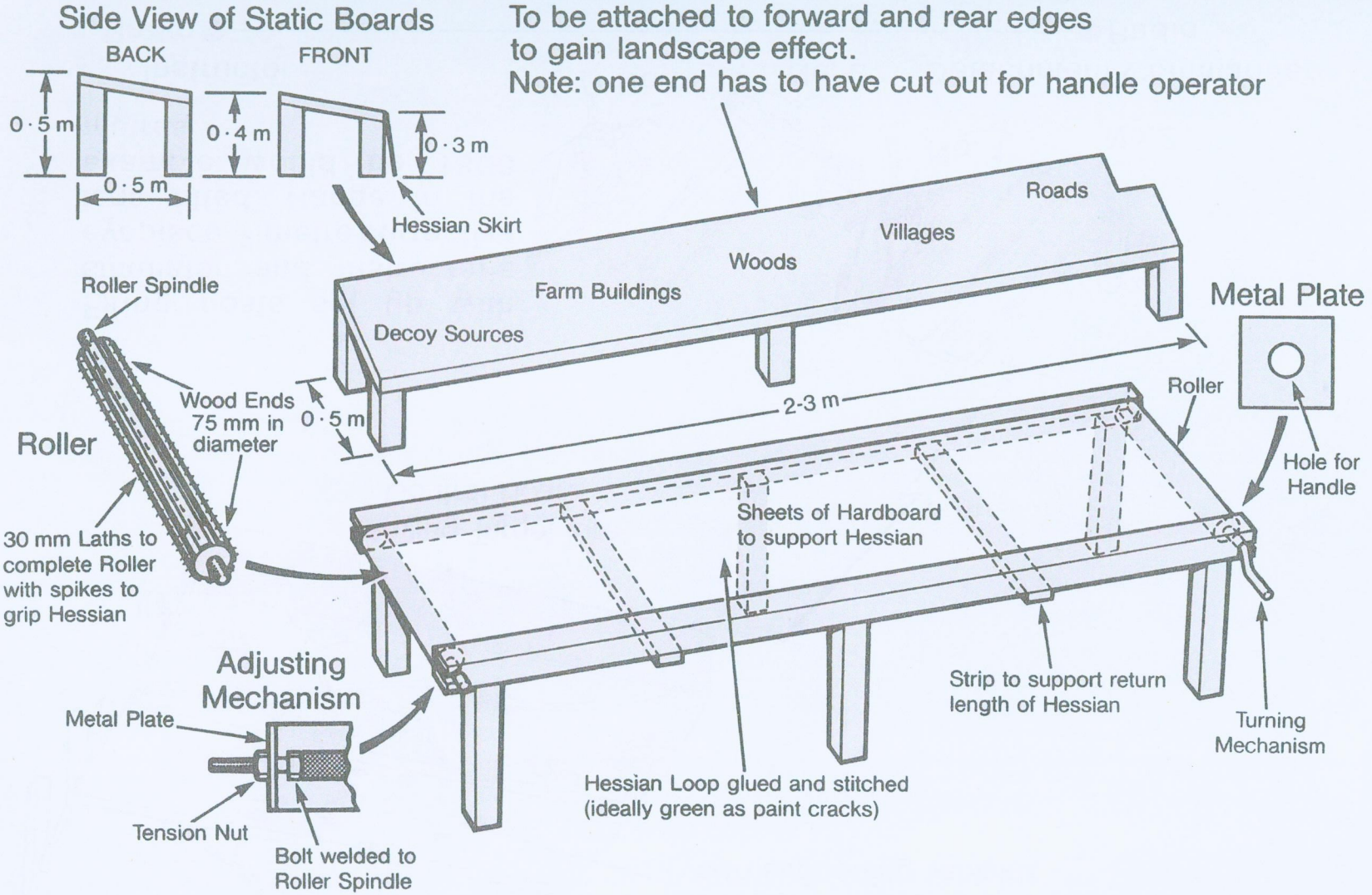

Fig 119. — Specification for a Moving Target Fire Control Board

RESTRICTED

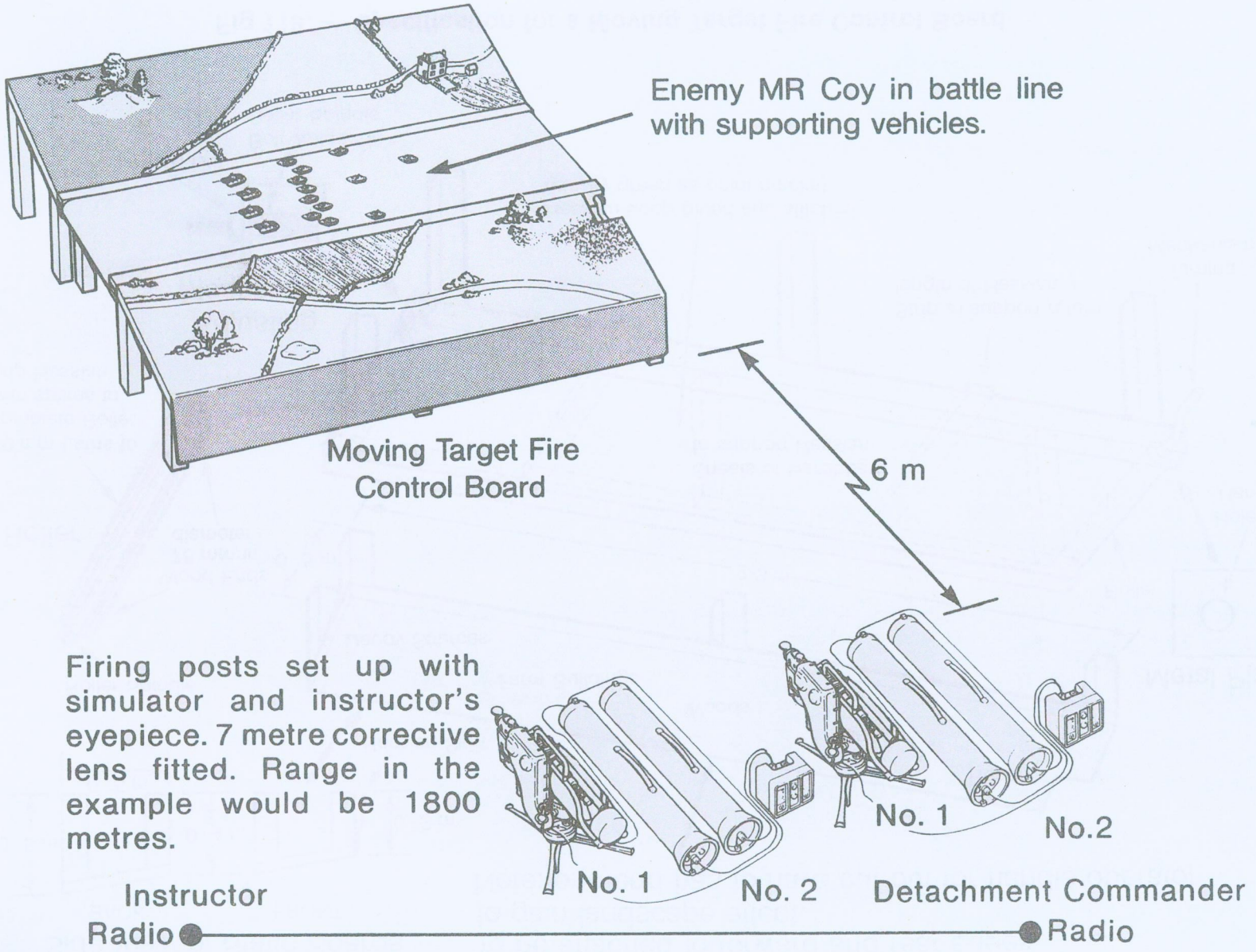

Fig 120.— Layout for a Fire Control Exercise

RESTRICTED

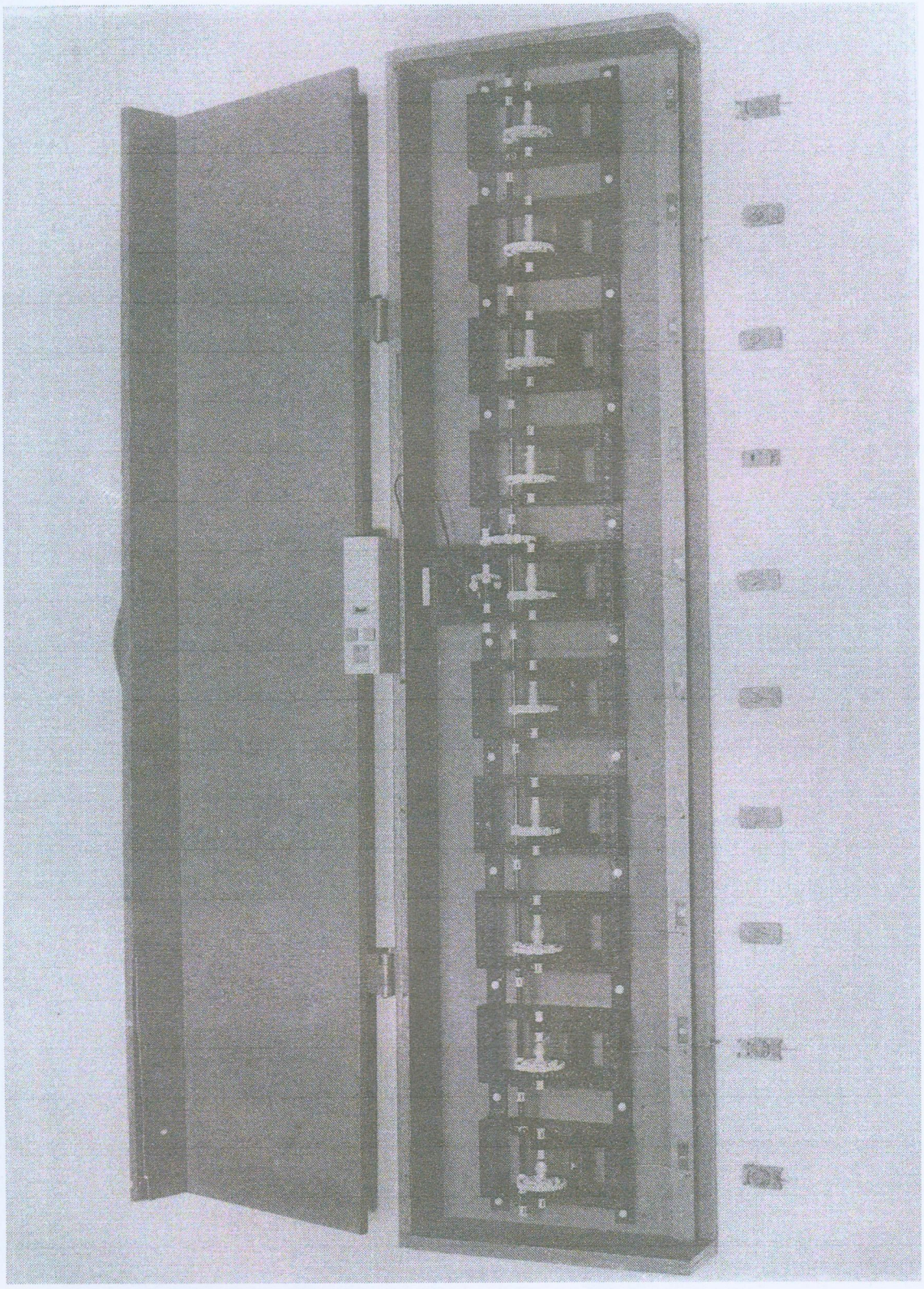

Fig 121. — Okeefe Trainer

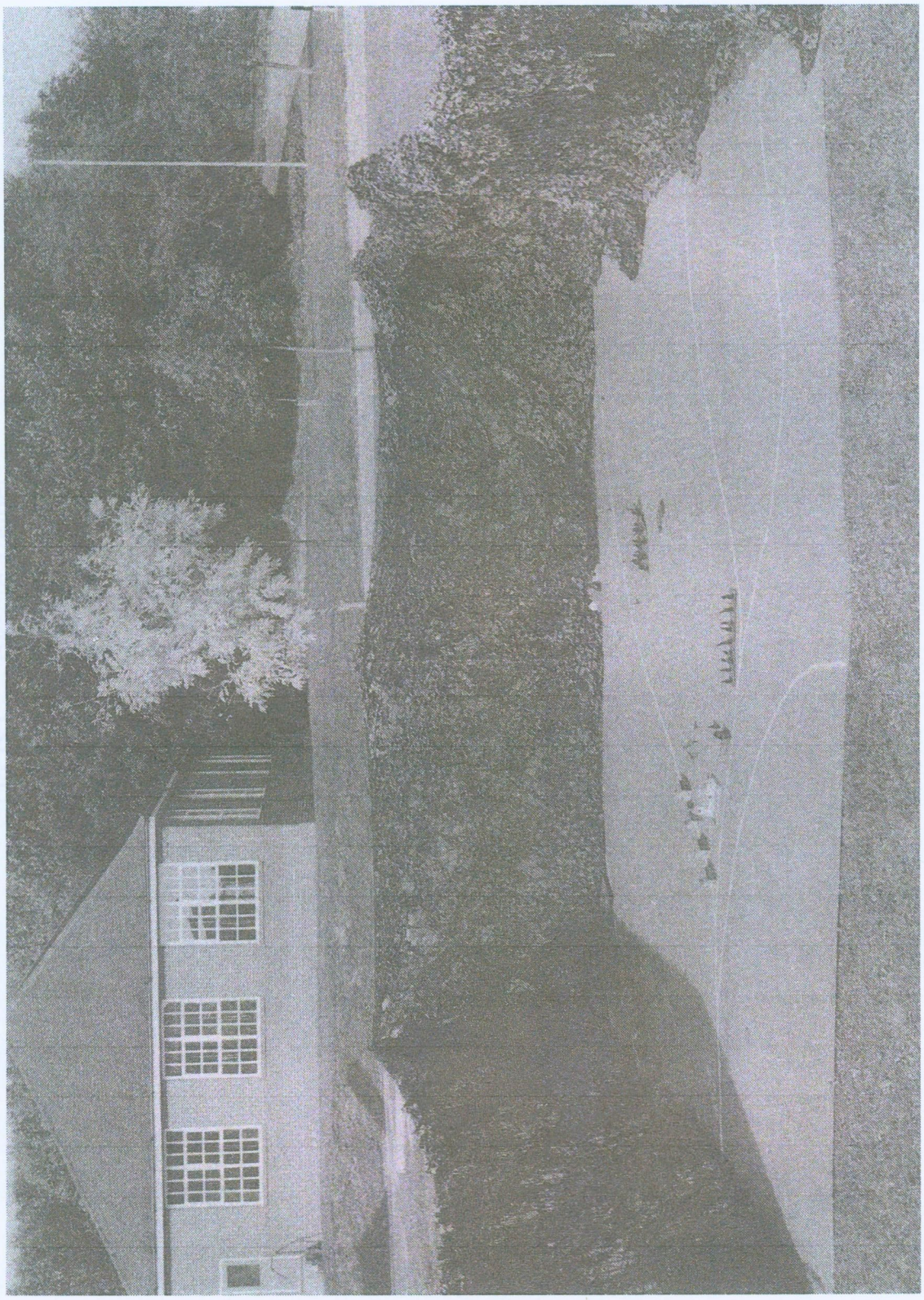

Fig 122. — Okeefe Trainer

SECTION 5. — BATTLE EXERCISES AND TESTS

Introduction

0529. If an anti-tank detachment is to be successful in war, it must be launched into battle knowing that the training it has received has been as comprehensive and realistic as is possible during peacetime.

0530. When a soldier arrives in the anti-tank platoon, he should already be a 'battle shot' having been subjected to the normal training sequence for infantry soldiers.

0531. On joining the anti-tank platoon he follows a similar progressive training sequence:

a. Basic lessons.

b. Practice periods.

c. Training tests/Annual weapon test.

d. Rangework.

e. Battle exercise team)
f. Battle test team) Both dry and live firing.

0532. MILAN is a team weapon and MILAN operators are trained and tested as a team. Having exercised and tested a team, progression may be achieved by involving more than one team. It should, however, be borne in mind that extra supervisors will be necessary to control what will be a larger exercise.

0533. Battle exercises prepare the soldier for battle by combining his fieldcraft and skill at arms training with his battle procedure and specialist weapon training.

0534. The level of the exercise or test will be determined by the standard of handling of the soldiers to be exercised or tested. The officer in charge must set a standard for each exercise or test.

0535. The scale and success of each exercise or test is limited only by the imagination and enthusiasm of the officer or NCO who plans and conducts it.

Principles of Battle Exercises

0536. The following principles must be constantly borne in mind when planning battle exercises:

a. Interest.

b. Realism.

c. Progression.

d. Stress.

Planning

0537. The following factors must be considered when planning:

a. *The Aim.* This must be clear before planning begins. It should be kept to one phase of battle, kept simple and borne in mind throughout the planning and conduct of the battle exercise.

b. *Selection of Ground.* The ground must fit the aim of the exercise. This will require careful reconnaissance and possibly tailoring of the aim to fit the ground available. It should offer the following:

(1) An exercise area.

(2) An administration area which cannot be seen from the exercise area.

(3) An area for carrying out concurrent activity which again should not be seen from the previous two areas.

(4) An area for carrying out preparation for battle that will offer natural camouflage and sufficient room to carry out the checks and tests on the equipment that are necessary prior to going into action.

(5) An area where a detachment which has been exercised can be debriefed and sent on to concurrent activity. This area should be quiet and not interfere with other activities going on round it.

c. *Realism.* The exercise area should be as like a battlefield as possible and clear of all non tactical kit and equipment. Realism can be enhanced by the use of simulated battle effects such as blank ammunition and pyrotechnics, dummies and targetry. All effects must be written into the exercise — noise alone is not sufficient. Realism will finally depend on the imagination and initiative of the officer or NCO in charge.

d. *Fieldcraft and Minor Tactics.* The soldier should be exercised in fieldcraft, basic weapon skills, battle procedure and minor tactics, depending on the aim of the battle exercise.

e. *Progression.* A programme of exercises must be compiled and the soldiers or detachments should be able to see the results of each. Records should be kept for each exercise. A programme could start with 'In action' routine and possibly end with fire and movement, live firing at a moving target.

f. *Simplicity.* A complicated exercise is difficult to organize and tends to confuse those taking part. Avoid incorporating too many lessons.

g. *Competition.* All exercises should be made competitive by awarding or deducting marks against assessment schedules. At the end of the exercise those taking part should be told both their good and bad points.

h. *Administration.* The success of the battle exercise will ultimately depend on good administration. Rehearsals should be allowed for and an accurate time appreciation should be made. Consideration should be given to concurrent activity to ensure that soldiers who are waiting to be exercised or have been exercised are employed in some useful activity. The activity could be a build up to the exercise but need not necessarily be related to it.

i. *Supervision.*

(1) Soldiers will learn by their mistakes, so good supervision is essential.

(2) It is the responsibility of the officer or NCO in charge to ensure that range regulations and standing orders are complied with and that the exercise conforms to current safety regulations.

Exercises and Tests

0538. Exercises and tests are planned and organized in the same way but differ in the way they are conducted. During an exercise the soldier or detachment is reminded or corrected as the exercise progresses. A test is run to check that the detachment has reached a required standard. Soldiers should not be stopped, criticized or corrected in any way unless a fault affects safety. This is particularly important during live firing.

Conduct of Battle Exercises and Battle Tests

0539. The outline sequence of a battle exercise/battle test is as follows:

a. *Safety Precautions.* To include all weapons and ammunition, air bottles and batteries.

b. *Organization and Briefing.* Layout, lessons covered, scoring, outline of how the exercise is to be run.

c. *Remind.* The important points to watch (battle exercises only).

d. *Introduction.* Connect with previous training and give the reason why.

e. *Aim.* Simple and clear.

f. *Orders:* In standard format.

g. *Battle Picture.* Confined to a single phase of battle, kept simple.

h. *Exercise.* Inspect, latest situation, supervisor painting the battle picture, watching for good and bad points.

i. *Debrief.* Normal safety precautions, in detail, award marks, allow come-backs.

j. *Summarize.* Collectively, main points, questions, encourage, look forward.

Supervisors

0540. The supervisor plays an important part in battle exercises and tests. His duties are:

a. To inspect the soldiers' preparation for battle.

b. To brief and paint the battle picture at the start line.

c. To accompany him/them throughout the exercise noting handling, fieldcraft and anything else that is being exercised.

d. To ensure safety at all times.

e. To debrief at the end and award marks accordingly.

Example of a Battle Exercise

0541. An example of a dry battle exercise instruction is given on the following pages.

RESTRICTED

ANTI-TANK PLATOON

1ST BATTALION THE LOAMSHIRE REGIMENT

EXERCISE LAST GASP — DRY BATTLE EXERCISE

Exercise Director	—	Capt R A Blueitt
Exercise Staff	—	CSgt Jones
		Sgt Smith
		Sgt Brown
		Sgt Kowalski
		Sgt Davis
		Cpl Palin
		Platoon and Section Commander's Driver Operators

FEBRUARY 1990

RESTRICTED

Serial	Annex	Details	First Page	Last Page
		Cover Sheet	i	
		Table of Contents	ii	
1		General Instructions	1–1	1–3
	A	Timetable	1A–1	
	B	Sketch Map	1B–1	
	C	Exercise Director's Brief	1C–1	1C–2
	D	Marking System	1D–1	
	E	Opening Narrative	1E–1	
	F	Battle Picture	1F–1	
	G	Signals Instruction	1G–1	
2		Notes for Supervisors	2–1	
3		Concurrent Activity	3–1	
4		Orders for Enemy	4–1	

RESTRICTED

SERIAL 1 TO
EXERCISE LAST GASP

GENERAL INSTRUCTIONS

Reference:

A. Map Sheet GSGS 5295 Salisbury Plain Training Area, Edition 1–GSGS Scale 1:50,000.

1. Exercise LAST GASP is a dry battle exercise which will take place on Training Area 5 on 4 Mar 90.

Aim

2. The aim of Exercise LAST GASP is to practise MILAN detachments in the 'In action' routine.

Conduct

3. The exercise will take place in three stages as follows:

a. *Stage 1.* Introduction to the exercise, and briefing by the Exercise Director. This will cover the following points:

(1) Normal safety precautions.

(2) The organization of the exercise.

(3) The scoring system.

(4) A reminder of the skills to be practised.

(5) The reasons for, the conduct, and the aim of the exercise.

(6) Orders.

b. *Stage 2.* The exercise.

c. *Stage 3.* Debriefing and scoring.

1–1
RESTRICTED

RESTRICTED

Administrative Instructions

4. ***Dress and Equipment.*** Each detachment will require its full scale of equipment, including drill rounds. Troops will wear combat suit, fighting order and carry personal weapons and NBC equipment. Combat helmets will be worn.

5. ***Transport Requirements.*** CSgt Jones is to arrange for the following transport to report to the anti-tank platoon stores at 0730 hours on the day of the exercise:

Serial	Vehicle	To Report To	Task/Remarks
1	1 x 4 Ton	Sgt Smith	Stores vehicle
2	8 x 1 Tonne	Detachment Commanders	Detachment vehicles
3	1 x ½ Ton FFR	Capt Blueitt	Ex Director's vehicle
4	4 x ½ Ton FFR	Section Commanders	DS vehicles
5	1 x FV 432	Capt Blueitt	Enemy vehicle

6. ***Ammunition.*** CSgt Jones is to arrange for the collection of the following ammunition on the day of the exercise:

a. Grenade hand smoke No. 83 — 18

b. Thunderflash Mk 8 — 18

c. Smoke generators No. 8 — 18

d. 7.62 belted blank — 1600

7. ***Signals Equipment.*** The platoon signals representative is to ensure that all platoon radio equipment is serviceable for the exercise. Replacements should be obtained if necessary. Section commanders' driver/operators will man the exercise radio net.

1–2
RESTRICTED

RESTRICTED

8. ***Stores.*** CSgt Jones is to arrange for the following stores to be available for the exercise:

a. Three tables with covers.

b. Camouflage cream.

c. Roll of D10 cable (minimum 600 metres).

d. Cable winder.

e. Wire cutters.

f. Six field telephones.

g. AFV models.

h. Twenty maps, protractors, compasses and binoculars.

i. Unit test equipment and harmonization equipment.

j. Airportable shelter 9 x 9.

k. Two blackboards (including waterproof covers) prepared as Annexes B and D.

l. Chalk.

m. Two Chatham Arches.

9. ***Rations.*** Haversack rations and urns of tea will be required. CSgt Jones is to arrange collection of these.

Command and Signal

10. The signal instruction for the exercise is shown at Annex G.

RESTRICTED

ANNEX A TO SERIAL 1
TO EXERCISE LAST GASP

TIMETABLE

Serial	Time	Event	Area	Action by	Remarks
1	0600	Breakfast	Bks	CSgt Jones	
2	0630	Muster parade	Platoon store	CSgt Jones	
3	0630–0645	Load stores/ Draw weapons	Platoon store	DCS	
4	0645	Platoon commander and staff move to exercise area	SPTA	Capt Blueitt	½ ton FFR and 4 ton vehicle
5	0800	CSgt Jones and detachments move to exercise area	SPTA	CSgt Jones	
6	0800–0830	Exercise rehearsal by staff	SPTA	Capt Blueitt	
7	0830	Exercise briefing by Exercise Director	Admin area	Capt Blueitt	
8	0900	Exercise starts	SPTA	All	
9	1500	Exercise ends	SPTA	All	
10	1500–1600	Clean and return stores	Platoon store	All	

1A–1
RESTRICTED

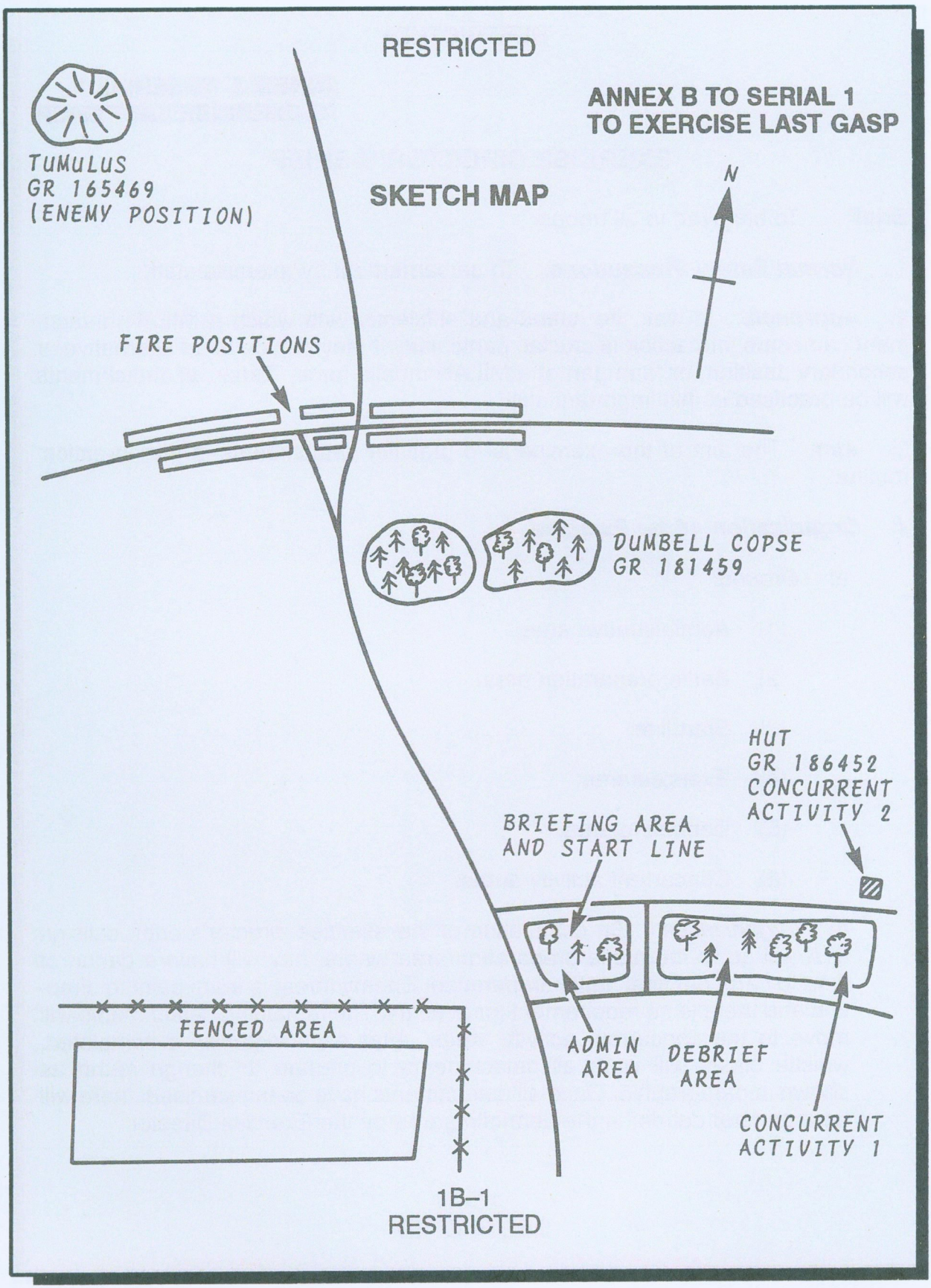
RESTRICTED
ANNEX B TO SERIAL 1
TO EXERCISE LAST GASP
SKETCH MAP
N
TUMULUS
GR 165469
(ENEMY POSITION)
FIRE POSITIONS
DUMBELL COPSE
GR 181459
HUT
GR 186452
CONCURRENT
ACTIVITY 2
BRIEFING AREA
AND START LINE
FENCED AREA
ADMIN
AREA
DEBRIEF
AREA
CONCURRENT
ACTIVITY 1
1B–1
RESTRICTED

RESTRICTED

ANNEX C TO SERIAL 1
TO EXERCISE LAST GASP

EXERCISE DIRECTOR'S BRIEF

Brief To be given to all troops

1. ***Normal Safety Precautions.*** To be carried out by exercise staff.

2. ***Approach.*** In war, the speed and efficiency with which a MILAN detachment can come into action is crucial, particularly if they deploy to an alternative or secondary position, or form part of a MILAN mobile force. Today, all detachments will be practised in this important skill.

3. ***Aim.*** The aim of the exercise is to practise detachments in the 'In action' routine.

4. ***Organization of the Exercise.***

   a. *Ground.*

      (1) Administrative area.

      (2) Battle preparation area.

      (3) Start line.

      (4) Exercise area.

      (5) Debriefing area.

      (6) Concurrent activity areas.

   b. *Organization.* On completion of the exercise director's brief, callsign 31A will go to the battle preparation area where they will have a period of time to carry out final battle preparation. Enemy threat is from: point to direction and there is no requirement for a sentry. The remaining detachments will move to the concurrent activity areas. After each exercise is completed, whistle blasts will warn all detachments to prepare to change round as shown in paragraph 5. Once all detachments have been exercised, there will be a general debrief in the debriefing area by the Exercise Director.

1C–1
RESTRICTED

RESTRICTED

5. ***Sequence of Events.***

Serial	Detach-ment	Activity								
		1	2	3	4	5	6	7	8	9
1	31A	B PREP	BE	CA1			CA2		CA3	
2	31C	CA3	B PREP	BE	CA1			CA2		CA3
3	32A	CA3		B PREP	BE	CA1			CA2	
4	32C	CA2	CA3		B PREP	BE	CA1			CA2
5	33A	CA2		CA3		B PREP	BE	CA1		
6	33C	CA1	CA2		CA3		B PREP	BE	CA1	
7	34A	CA1		CA2		CA3		B PREP	BE	CA1
8	34C	CA1			CA2		CA3		B PREP	BE

Each member of the exercise staff should have a copy of this sequence. The change round will be carried out on command of the Exercise Director.

6. ***The 'Remind' Stage.*** The Exercise Director will remind the detachments of the sequence of battle procedure and the 'In action' routine which is carried out on deployment to positions.

7. ***The Scoring System.*** As on the chalkboard made out as Annex D.

8. ***Opening Narrative.*** *See* Annex E to Serial 1.

1C–2
RESTRICTED

RESTRICTED

ANNEX D TO SERIAL 1
TO EXERCISE LAST GASP

MARKING SYSTEM

HPS 100 PASS 60

Det	Battle Prep	Field-craft	Weapon Drills	Contact Report	DC's Brief	Score	Position
	10	30	40	10	10	100	
31A							
31C							
32A							
32C							
33A							
33C							
34A							
34C							

1D–1
RESTRICTED

RESTRICTED

ANNEX E TO SERIAL 1
TO EXERCISE LAST GASP

OPENING NARRATIVE

Task Organization

1. ***A Company.*** Normal

   a. Atts — CS 31 Complete

   b. Dets — Nil

Enemy and Ground (from model)

2. Gently undulating, open grassland with some pine plantations. Enemy are moving from SWINDON south to BULFORD. The military complex there is believed to be the objective. Reconnaissance expected shortly.

   a. *Friendly Forces.* 1 LOAMSHIRES have been deployed east of the River AVON to deny penetration. A company will deploy two up on DUMB-BELL COPSE.

   b. *Attachments and Detachments.* Nil.

Mission

3. A company is to establish a defensive position at DUMB–BELL COPSE by 2000 hours. They are to destroy all enemy within designated killing areas in order to prevent penetration of the battle group area.

Execution

4. ***Concept of Operations.*** A company is to establish a defensive position centred around DUMB-BELL COPSE providing anti-armour killing areas to the east and west. Main effort: destruction of enemy within killing areas.

RESTRICTED

5. ***Mission/Task.*** CS 31: Establish an anti-armour defence at DUMB-BELL COPSE by 2000 hours. Destroy enemy within killing areas in order to prevent enemy penetration into BULFORD.

6 ***Co-ordinating Instructions.***

a. *Timings.* You will be called forward from the assembly area by radio when the section commander is ready.

b. *Track Plan.* Stick to existing tracks. No vehicles forward of DUMB-BELL COPSE.

c. *Company Release Point.* On the northern side of the wood at GR 180450.

d. *NBC State.* One.

Service Support

7. Details later.

Command and Signals

8. Location of section commander and company HQ later.

a. Line to be laid.

b. Radio silence imposed.

c. Password — AC — DC.

1E–2
RESTRICTED

RESTRICTED

ANNEX F TO SERIAL 1
TO EXERCISE LAST GASP

BATTLE PICTURE

Brief To be given at start line by supervisor acting as Section Commander

1. The company is moving into a position around the copse to take up a defensive position. I will take you forward to your positions and give you a brief from your positions. We expect the enemy reconnaissance soon, so we must deploy our MILAN quickly. We will drive up to the wood and then deploy on foot.

2. ***Section Commander's Brief.*** *(To be given from fire positions.)*

a. *GR of Position.* 179462.

b. *Battalion/Company Layout.*

(1)

A Company	DUMB-BELL COPSE	GR 181459.
B Company	BRIGMERSTON	GR 163455.
C Company	SILK HILL	GR 185471.

(2) In A company, deployed is:

1 Platoon	Left forward	GR 179463.
2 Platoon	Right forward	GR 181463.
3 Platoon	Depth	GR 181459.
Company HQ	In the COPSE	GR 181459.

(3 B company has one MILAN detachment mutually supporting us.

c. *Main Tank Threat.* From North to South.

d. *Temporary and Permanent Positions.* To be pointed out.

e. *Arcs.* Right — Tumulus GR 166469.)

Left — Barn GR 171463.) Killing Area 6

f. *Limits of Opening Fire.* To be pointed out.)

g. *Vehicle Positions.* In COPSE GR 181459.

1F–1
RESTRICTED

RESTRICTED

h. *Authority for Opening Fire.* From authorizing commander, STAP control measure 2D.

i. *Priority of Engagement.* Reconnaissance, Command, Air Defence, Tanks, APCs.

j. *ETA of Enemy.* Reconnaissance, within two hours. Main body in 12 hours.

k. *Where Line Must Be Laid To.* From each detachment to company HQ.

1F–2
RESTRICTED

RESTRICTED

ANNEX G TO SERIAL 1
TO EXERCISE LAST GASP

SIGNALS INSTRUCTIONS

1. ***Net Diagram***

FREQ 1	
30A	Ex Director
31	Supervisor 1
32	Supervisor 2
33	Enemy

FREQ 2	
10	Ex Director
Normal CS	Participants

2. ***Frequencies.***

   a. Freq 1 — 40.00 Exercise Net.

   b. Freq 2 — 42.250 Company Net.

1G–1
RESTRICTED

RESTRICTED

SERIAL 2 TO
EXERCISE LAST GASP

NOTES FOR SUPERVISORS

1. Once the detachment have prepared for battle, they will be inspected by the supervisor in the battle preparation area. He will examine all their equipment including vehicle equipment, and assess marks as appropriate.

2. When the detachment arrives at the start line (company release point), they will be met by their supervisor (section commander) who will lead them to the copse and take the detachment commander forward to his positions where he will be given a brief. He will then withdraw to a position of observation where he can watch and listen without interfering.

3. He will mark the detachment on:

   a. Detachment commander's brief.

   b. Movement of the detachment to their positions.

4. Once the detachment are deployed, the supervisor will order the enemy vehicle to move and will mark the detachment on:

   a. Detachment commander's contact report.

   b. Weapon drills by MILAN teams.

5. He should allow the detachment to proceed unless there is a risk of injury.

6. Once the engagement of enemy has been completed, the supervisor should get the detachment out of action and back to their vehicle. From there they should proceed to the debriefing area.

7. In the debriefing area, he should use the chalkboard to debrief the detachment, bringing out good as well as bad points. Once completed, the detachment should move to concurrent activity.

2–1
RESTRICTED

RESTRICTED

SERIAL 3 TO
EXERCISE LAST GASP

CONCURRENT ACTIVITY

1. Concurrent activity will take place in three parts. Each activity is to last for one hour.

2. Concurrent Activity 1, run by Sgt Kawalski will deal with AFV identification and will take place at the south east corner of the wood at GR 185452. It will consist of three tests as follows:

   a. Test 1. Twenty AFV in silhouette positions)

   b. Test 2. Twenty AFV in various positions) 20 minutes each

   c. Test 3. Twenty AFV in partially concealed) positions.

3. Scores are to be kept.

4. As a detachment arrives at the concurrent activity, it will do Test 1, then Test 2, then Test 3, after which it will move to the next activity.

5. Concurrent Activity 2, run by Sgt Davis, will deal with marking out a MILAN battle trench and erecting a Chatham Arch. The activity will take place at the north east corner of the wood at GR 186452.

6. Concurrent Activity 3, is to be a practical battle card test conducted by Cpl Coyle at GR 184452.

3–1
RESTRICTED

RESTRICTED

SERIAL 4 TO
EXERCISE LAST GASP

ORDERS FOR ENEMY

1. ***Location.*** Valley GR 168471.

2. ***Equipment.*** FV 432 with pintle mounted GPMG. Radio on frequency 40.000. Callsign 33.

3. ***Ammunition.***

   a. 7.62 belted blank — 1600.

   b. Grenade hand smoke — 18.

4. ***Action.*** On command of callsign 32 or callsign 30A, drive south past the tumulus at GR 166469 towards the barn at GR 172462. When engaged, as signified by thunderflash, throw smoke grenade and stop. If the MILAN teams are spotted, engage with GPMG. Once action is complete, remain static until ordered to return to start point by exercise supervisor.

4–1
RESTRICTED

SECTION 6. — CONDUCT OF ANNUAL WEAPON TESTS

0542. ***Introduction.*** Details of annual weapon tests are given in Annex D. The test must be completed annually by all MILAN platoon personnel and is usually conducted just prior to annual firing. Personnel who deploy with the firing post on operations must pass at SKILLED standard, and all other platoon personnel must pass at AVERAGE standard.

0543. ***Conduct.*** The test is normally conducted on the basis of a circuit with a number of stands. Conducting NCOs must ensure that time limits are not imposed on the weapon tests unless they are stipulated.

0544. ***Preparation.***

a. All necessary kit and equipment must be assembled by conducting NCOs and tested before deployment to stands. Spare simulator batteries, and bottles and batteries for MIRA will be required.

b. NCOs responsible for conducting individual tests must make out marking sheets.

c. All tests should be conducted first as a dry run to ensure that marking standards are correct.

d. A thorough central briefing of all conducting personnel and personnel to be tested is essential. Personnel should be split into appropriate groups and the plan should ensure that tested personnel do not mix with those who have yet to be tested.

0545. ***Results.***

a. Each person tested should be told immediately the result of each test performed.

b. Consolidated results should be published within 24 hours of the end of the test.

0546. ***Status of Test.*** The test is set at operational standards. It is a day when the platoon should be prepared to display its standards of professionalism and competence, and visitors should be encouraged.

SECTION 7. — TRAINING MILAN OPERATORS/NCOS

0547. The training of MILAN operators is a battalion responsibility. It is assumed that when the potential operator attends a battalion MILAN cadre he is already a skilled infantryman, and should not need more than refresher training on basic skills. There are two levels of MILAN operator. These are Basic, which should be achieved by an operator on completion of a unit cadre, and Advanced, which is achieved through on the job training. Units should ensure that all soldiers who deploy with a firing post are of an Advanced standard. Details of training objectives to be achieved at Basic and Advanced levels can be found in Infantry Employment Volume 5, Part 1, Section 2.

0548. These two levels of operator skills are the first steps in the progressive level of skills within the MILAN platoon. The next progression is attendance at each of the three levels of courses (Detachment Commander, Section Commander and Platoon Commander) at Infantry Training Centre, Warminster.

Infantry Training Centre Courses

0549. MILAN courses at Anti-Tank Division, Infantry Training Centre, Warminster are run at officer, SNCO and JNCO level for both the Regular and Territorial Armies. Full details are given in the Courses Handbook and Infantry Employment Volume 5, Parts 2, 3, and 4, Section 2.

0550. Preparation to attend the courses is vital. It helps the officer or NCO to get full value from the course and thus raises the standards on both the course and in battalions. Pre-course training should be based on Anti-Tank Division training objectives for the relevant course the individual is to attend. Self help pre-course is of limited value and it is recommended a minimum of one week's structured pre-course training be provided.

SECTION 8. — TRAINING AIDS

Drill Ammunition Tubes and Junction Boxes

0551. ***Introduction.*** Once MILAN missiles have been fired the missile tube and junction box can be adapted to make drill training aids. The aids can be made quickly and simply but it will be necessary to seek advice and assistance from the unit REME detachment.

0552. ***Safety.***

a. No fired ammunition tube is to be removed from the range unless a 'Free from Explosives' certificate has been obtained for it from the ATO/AT in attendance. The regulations stated in Ammunition Explosive Regulations Volume II, Part 1 (Army Code No. 13150), are to be strictly adhered to.

b. Advice on safety when cutting and handling the fired ammunition tube must be sought from the unit REME detachment.

c. On no account are DRILL or INSTRUCT/INERT missile tubes to be taken onto the firing point when live missiles are to be used.

0553. ***Stores.***

EMER Workshop 'O' 501. Paragraphs 1–47
Ammunition Explosive Regulations Volume II Part 1 (Army Code No. 13150 (Revised 1977))
Tool kit to CE Tech F1/5180–99–120–3923
Protective clothing
Kerocleanse
Running water supply
Araldite
Masking tape
Matt paint, olive green
Gloss paint, white and blue
Glass fibre kit
Quantity of 3 mm self tapping screws
Quantity of 2 mm self tapping screws
Quantity of 38 mm x 3 mm nuts and bolts
Quantity of Spilsorb
Rags

0554. ***Methods of Manufacture — Drill Missile Tubes.***

a. *Workshop Safety Regulations.* Before work of any description is carried out on fibre glass material the user must be familiar with the relevant workshop

regulations. All the appropriate regulations may be found in EMER Workshop 'O' 501, particular attention should be paid to the paragraphs that refer to the hazards whilst using fibre glass.

b. *Manufacturing Details.* Proceed as follows:

(1) Measure from the front end of the tube 110 mm and then position the piston so that the top of the piston is level with the 110 mm mark *(see* Fig 123).

(2) Measure 155 mm from the front end of the tube and drill four 2 mm holes at equal distances around the tube on the 155 mm line. Ensure that these holes penetrate the drill tube and the piston. Secure the piston in position using three 2 mm self tapping screws. The fourth screw will be fitted when the junction box is secured *(see* (4), (5) and (6) below and Figs 123 and 124).

(3) Block off the three gas vents on the forward part of the tube and also block off the hole in the centre of the piston, i.e., the piston vent (*see* Fig 122). Use a self tapping screw or araldite for the piston vent.

(4) Secure the junction box to the drill tube at the junction box front and rear mountings (*see* Fig 124) using four 38 mm x 3 mm nuts and bolts. The junction box is now in the normal operating position.

(5) Ensure, when fitting the junction box, that the six pin blue plug on the junction box engages in the socket on the latching unit.

(6) Cut the guidance wire protective cover 140 mm from the front end of the tube and secure the cover to the tube and piston using the fourth 2 mm self tapping screw (*see* Fig 124). This operation is necessary to prevent damage to the support assembly of the firing post.

(7) Remove the plastic insert from inside the front protective cover and secure this to the front end of the tube using four suitable self tapping screws. This forms a sealing membrane across the front of the tube to simulate the operational ammunition (*see* Fig 125).

(8) Stand the tube on its front end and fill with 6.650 kgs of spilsorb to give the tube correct overall weight. It is necessary to shake the spilsorb down into the tube in order to make it settle.

(9) Make up the fibre glass solution.

(10) Cut fibre glass strips to lay on top of the spilsorb around the gas generator and between the fins of the same (*see* Fig 123).

(11) Apply fibre glass solution on top of the spilsorb and also cover the

rear of the gas generator ensuring that all the holes in the gas generator are covered (*see* Fig 125).

(12) Allow fibre glass to set.

c. *Points to Note.*

(1) The reason for using spilsorb is to give 'correct' weight distribution along the tube. This is not possible using sand, earth, etc.

(2) Where specific sizes of screws/nuts/bolts are stated, it is possible to use suitable similar alternatives if the recommended sizes are not available.

0555. ***Marking — Drill Tubes*** (DLSA 3344 of 10 November 1977 refers). Drill tubes are to be painted as follows:

a. Obliterate all markings except end cap location marks and directional arrows on the sides of the tube. Use Olive Green Drab paint.

b. Paint a 50 mm wide band around the forward end of the tube in Oxford Blue paint (No. 105, BS 381C).

c. Stencil the word 'DRILL' in 30 mm, white letters on the blue band and also mark the word 'DRILL' on the junction box in appropriate sized white letters.

0556. ***Marking — Inert/Instructional Tubes.*** An Inert/Instructional tube may bear the overall body colour and markings of the operational ammunition but the marking 'INERT/INSTRUCT' is to be displayed prominently in white in 30 mm stencilling. The junction box is also to be marked 'INERT/INSTRUCT'.

0557. ***Marking — Logistic Containers.*** Logistic containers are to be painted as follows:

a. All markings, less the lid positioning mark, weight and volume details and the self propelled ammunition symbol are to be overpainted using Olive Green Drab. Labels are to be removed and care must be taken to ensure that nothing remains which might indicate a live store.

b. Both sides of the container are to be marked '4 GM MILAN INERT/ INSTRUCT' or '4 GM MILAN DRILL' as appropriate in white in 30 mm stencilling.

The Simulator

0558. The MILAN Simulator is a most valuable training aid. If used imaginatively with other aids such as live target, scale models, field miniature range equipment and

the moving target fire control board it can largely make up for the limited number of live missiles available for training.

0559. The simulator comes in two versions. The DX143 is for use with the ground role MILAN and the DX135 is adapted for use with MILAN compact turret.

0560. Because target engagement with the simulator can be made progressive and is infinitely variable it can be adjusted to provide challenging training for all from a new MILAN recruit to the experienced operator, without frustration to either.

0561. Simulator training must feature regularly in platoon training programmes, and before live firing particularly it must be used intensively. For an operator to be considered adequately practised to fire a live missile he must have carried out at least 150 engagements using the simulator and achieved consistent 'K' kills under all conditions and against all types of target.

0562. Simulator training should always be monitored by an experienced coach who is capable of identifying faults and coaching the firer to a higher standard. The use of the instructor's eyepiece allows this on a one to one basis. However, to provide more class participation it is possible to monitor the firer's progress using a CCTV camera fixed into the instructor's eyepiece and connected to a monitor screen.

0563. Details are as follows:

a. *Camera.* MONO HITACHI HV 62K.

b. *Connecting Lens.* DALLMEYER 25 mm f/0.98 C2692/X4.

c. *Interface Bracket* (*see* Fig 126). Locally manufactured in aluminium.

d. Items **a.** and **b.** should be obtainable through normal military channels but cases of difficulty should be referred to ASTS, CMETS, Wilton Park, BEACONSFIELD, Bucks HP9 2RP.

0564. Simulator training can also be carried out using the MIRA optical attachment. This allows an instructor to monitor an operator's tracking ability while he engages a thermal image. Thermal targets are issued to facilitate this training.

MIRA Power Source

0565. MIRA batteries are expensive and in short supply. An alternative power supply is available using a standard CLANSMAN 24 volt battery and the 24/7 volt DC to DC conversion kit issued with MIRA.

0566. The connecting cable in the converter will be found to have no terminals. The correct terminals in the form of a clip interface are, however, issued with each PRC 351 as part of the cable assembly. The part number is Z42 5995–99–620–2113. By

soldering the wires to the clip interface an alternative method of providing power for MIRA is made available.

The Field Miniature Range Equipment

0567. The field miniature range equipment (*see* Fig 127) is a most useful aid to realistic training. It allows the movement which is essential to effective tracking practice, without the difficulty of providing and controlling live targets. Very imaginative training is possible using the equipment and all MILAN platoons should have at least one. The part number is either:

Range Field Miniature Target Set No. I Mk 3 No. 6929–99–861–4285

or

Range Field Miniature Target Set No. I Mk 4 No. 6920–99–828–4436

0568. The best AFV models for use with the equipment are in 1:100 scale.

a. Crude rubber versions to practise tracking are available from military sources. The designation is:

Target Rubbers, No. 9, 6/MT15 6920–99–861–4123.

b. Models which allow target identification as well are available from MILTRA MODELS, 357 Uxbridge Road, Rickmansworth, Herts. There are two types:

(1) *Rubber.* Detailed rubber models of a limited number of AFVs. They can be painted realistically but usually need to be stuck to a skid plate before they can be attached effectively to the equipment wires.

(2) *Metal.* Very detailed models of most AFVs are available at about £6 each. Whilst not ideal for use with the equipment they do allow the variety of targets not available in the rubber range of models.

Training Funds

0569. There are a number of sources of funds which may be used to purchase training aids not available from official sources. The details are normally held by battalion seconds in command or training majors. A degree of persistence and patience is usually required to achieve success in obtaining release of such funds.

0570. Examples are:

a. Commanding Officer's Training Fund.

b. Formation or District Training Funds.

c. Educational training votes for the supply of books such as Jane's AFVs, Background to Soviet Forces, International Defence Review, etc.

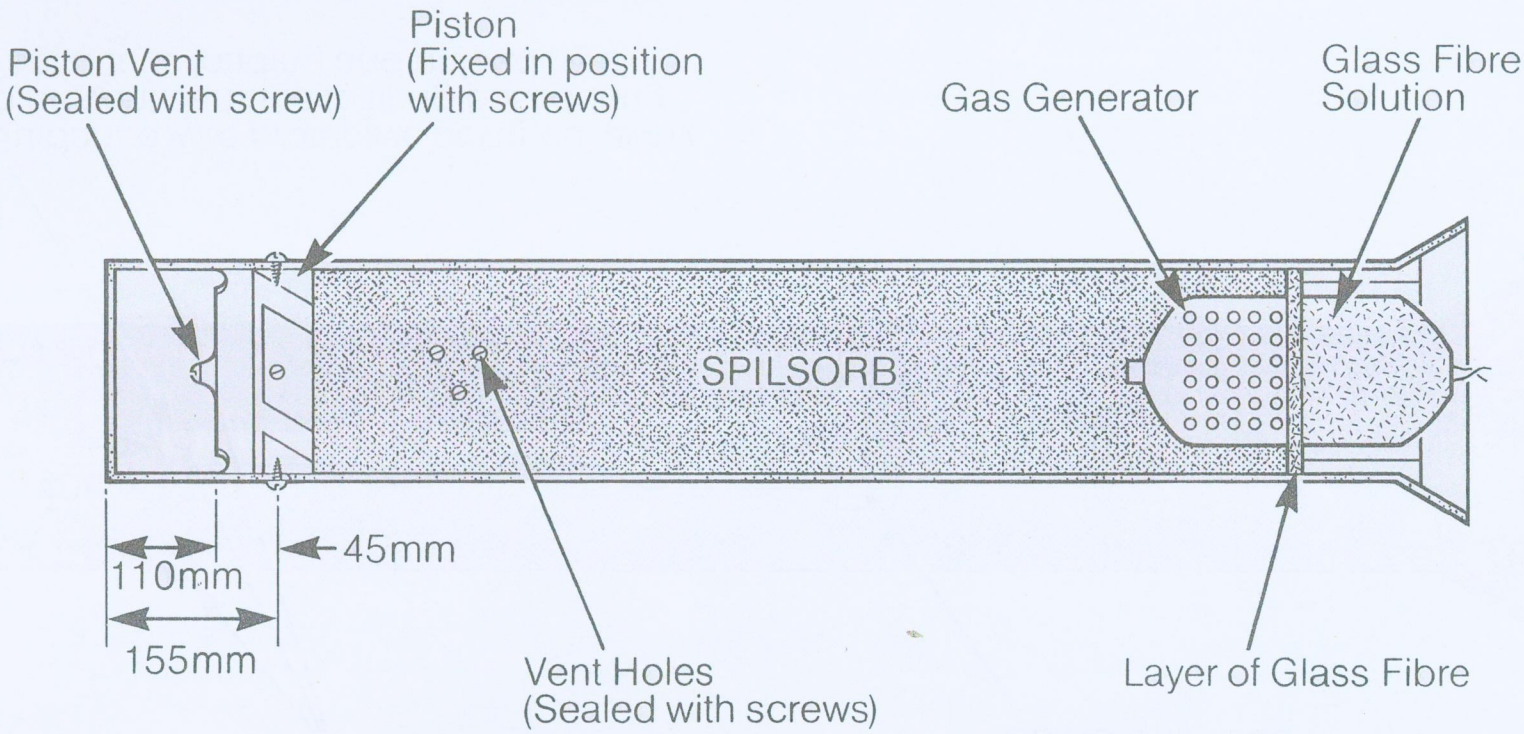

Fig 123 — Manufacture of a Drill Missile Tube — Stage 1

RESTRICTED

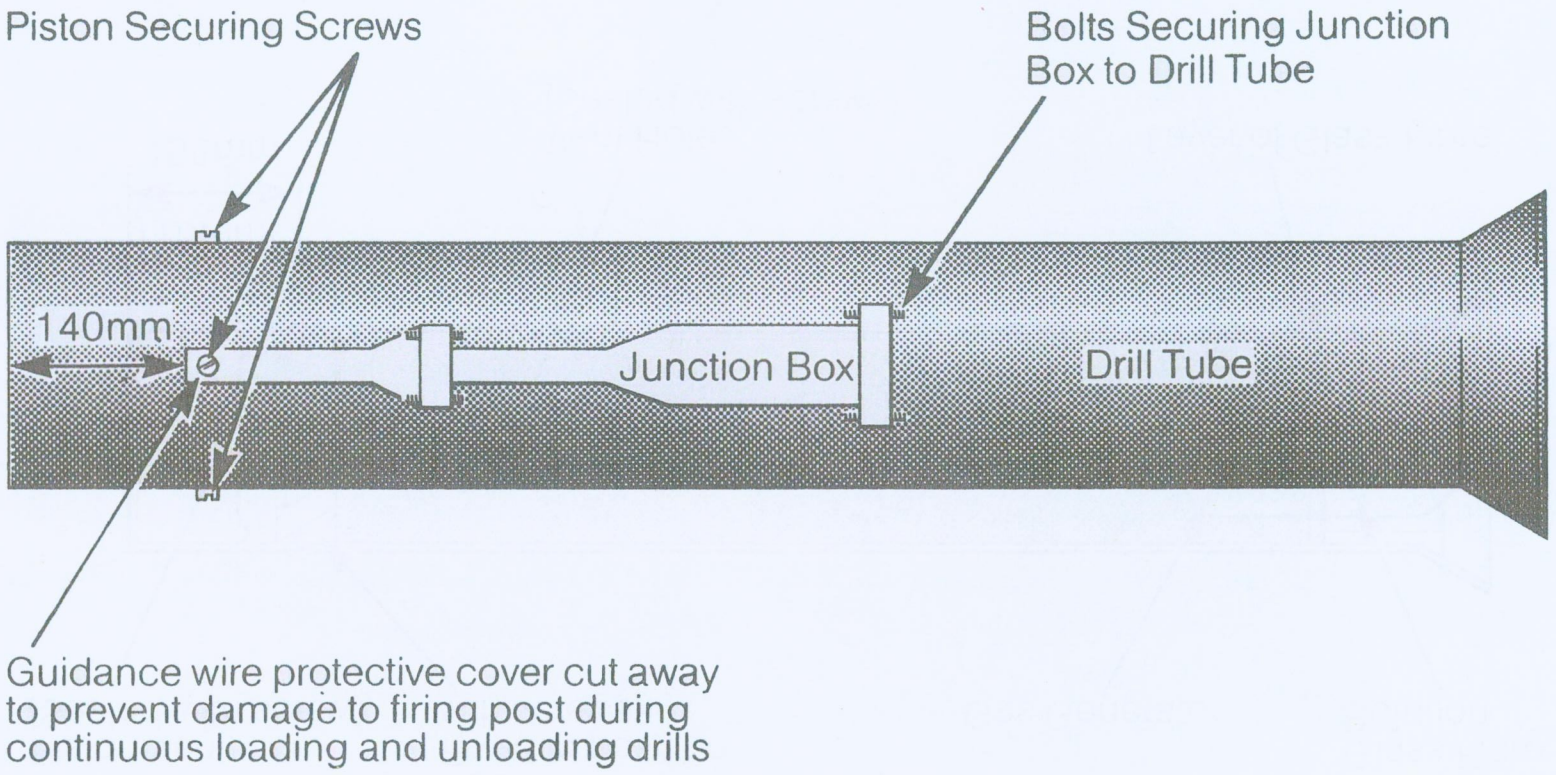

Fig 124. — Manufacture of a Drill Missile Tube — Stage 2

RESTRICTED

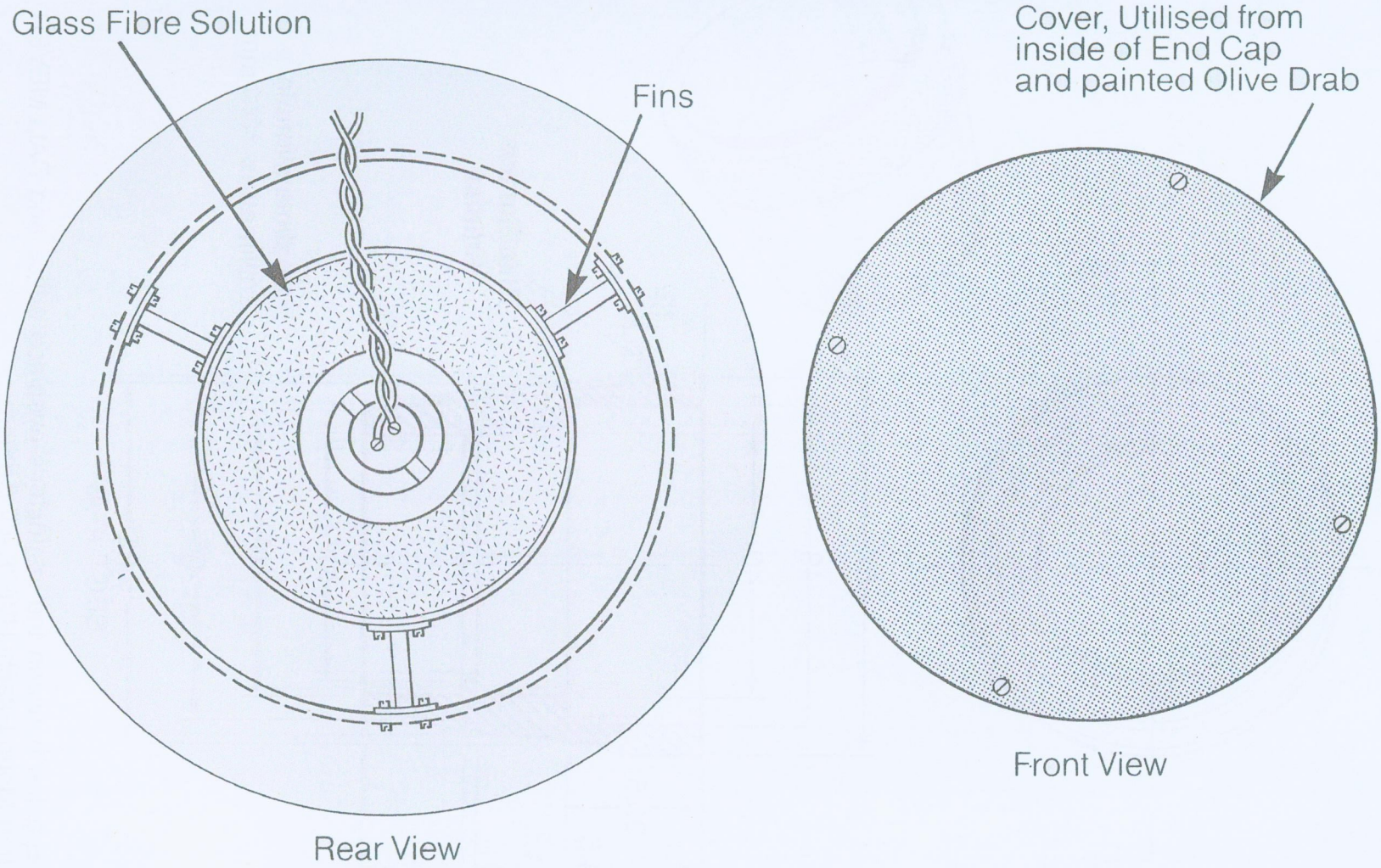

Fig 125. — Manufacture of a Drill Missile Tube — Stage 3

RESTRICTED

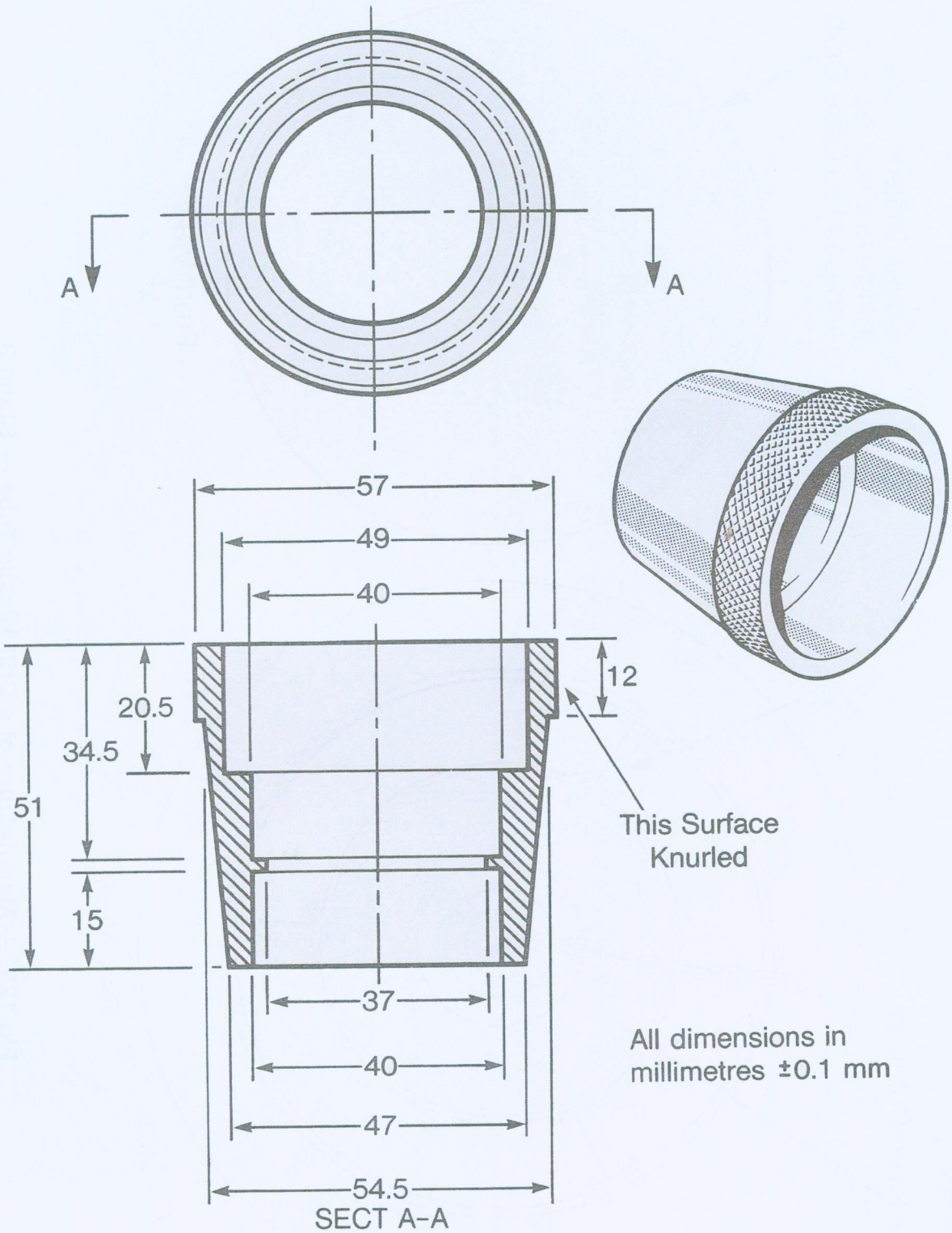

Interface Bracket between the instructor's eyepiece orifice and DALLMEYER lens attached to a Mono Hitachi HV62K TV Camera.

Fig 126. — Simulator CCTV Monitor Interface Bracket

Fig 127. — Use of the Field Miniature Range Equipment

Chapter 6

AFV IDENTIFICATION TRAINING

SECTION 9. — GENERAL INTRODUCTION

0601. Officers and SNCOs who have passed an Anti-Tank Course at the Warminster Training Centre should be made responsible for unit AFV identification training.

0602. The syllabus designed to produce an instructor is not suitable for operator training within the battalion.

0603. These notes have therefore been produced to enable the trained instructor to run a unit cadre for MILAN operators. 94 mm LAW operators can be trained using the Armoured Fighting Vehicle Identification Training System (AFVITS) which is on issue to all battalions and can be enhanced with training aids from the MILAN platoon's resources.

0604. The syllabus is based on a list of AFVs which it is considered can be taught realistically to operators in a battalion. Instructors should confirm this syllabus with their Unit Training Directives before compiling their AFV Training Programmes.

0605. This pamphlet assumes that soldiers have received basic training in 'Why things are seen' and the effects that changes of light have on observation and identification.

SECTION 10. — AFV IDENTIFICATION STANDARDS

0606. The standards to be achieved are based on the operational role of the operator. Standards are laid down in Army Training Directive (ATD) No. 9, Recognition Training, as follows:

a. *Level 1.* Basic.

b. *Level 2.* Intermediate.

c. *Level 3.* Advanced.

d. *Level 4.* Specialist

0607. ***Thermal Image Assessment, Video.*** This should be conducted in accordance with ATD No. 9.

0608. ***Fire Control Exercise.*** Conducted along the lines of the fire control exercise at Chapter 5.

0609. ***Fire Control Test.*** Conducted along the lines of the fire control test at Chapter 5 under simulated battle conditions.

0610. ***Time Limit.*** All assessment levels should be conducted under a time limit of 20 minutes for 25 vehicles. The fire control exercise and test can be conducted on a static or moving target fire control trainer.

SECTION 11. — PRINCIPLES OF AFV INSTRUCTION

0611. The AFV identification training syllabus is based on four principles:

a. *Identification Features.* The AFVs are taught so as to enable the soldier to record identification data as he sees, and remembers the vehicle (*see* Fig 128).

b. *Reference Material.* The soldier is encouraged to construct his own reference material, rather than being issued with handouts and precis documents.

c. *Repetition.* The soldier is 'saturated' with continual and repetitive instruction until familiarization is complete.

d. *Interest.* The soldier should be encouraged to develop a real interest in the subject. From an interest will develop an enthusiasm, which is the basis for success in AFV identification.

SECTION 12. — NOTES FOR THE INSTRUCTOR

Preliminary Training

0612. Units may have certain soldiers who have had no training in AFV identification, or recognition, or who have received some instruction but show little aptitude for the training. For these and similar cases, a preliminary lesson has been devised. It is in lesson plan form at Section 14. It can be used to precede unit cadres, at the discretion of the AFV instructor. The aids for this preliminary lesson are at Fig 129.

Continuation Training

0613. Once the basics have been thoroughly taught, a sustained effort is required to maintain proficiency, requiring practice particularly under stress. New vehicles must be taught and practised in a similar way to the basic lesson, as and when they enter service.

0614. The 'logic tree' devised to improve the soldier's chances of successful identification once the syllabus is known, has been included at Fig 130.

0615. In order to assess how well a soldier can carry out the skills required of a MILAN operator including AFV identification, a fire control exercise and test have been devised, and are illustrated at Chapter 5. These should reveal the operator's ability to make the correct target selection decision under stress.

SECTION 13. — AIDS TO INSTRUCTION

Resources

0616. Until an Army wide system is produced to provide the resources for AFV instruction, instructors will have to rely on the material available through the sources listed at Section 20.

Assimilation of Teaching

0617. Assimilation of the teaching is based on the principles at Section 11 and the use of three aids:

a. *Rough Sheets.* The rough sheets are used by the soldier to take notes in the AFV lessons (*see* Fig 131). The notes are then transferred neatly onto the data sheets.

b. *Data Sheets.* Data sheets (*see* Fig 132) are made up from lesson notes and when clipped together make up a reference book for the soldier. The instructor should periodically check these books.

c. *AFV Cut Outs.* AFV sketches are designed to be cut out after reproduction and stuck onto the data sheets. The detail on the sketches for the suggested syllabus are related to what an operator is likely to see at weapon ranges. A brief description of the vehicle accompanies each sketch, and is related to possible fire control orders and intelligence gathering.

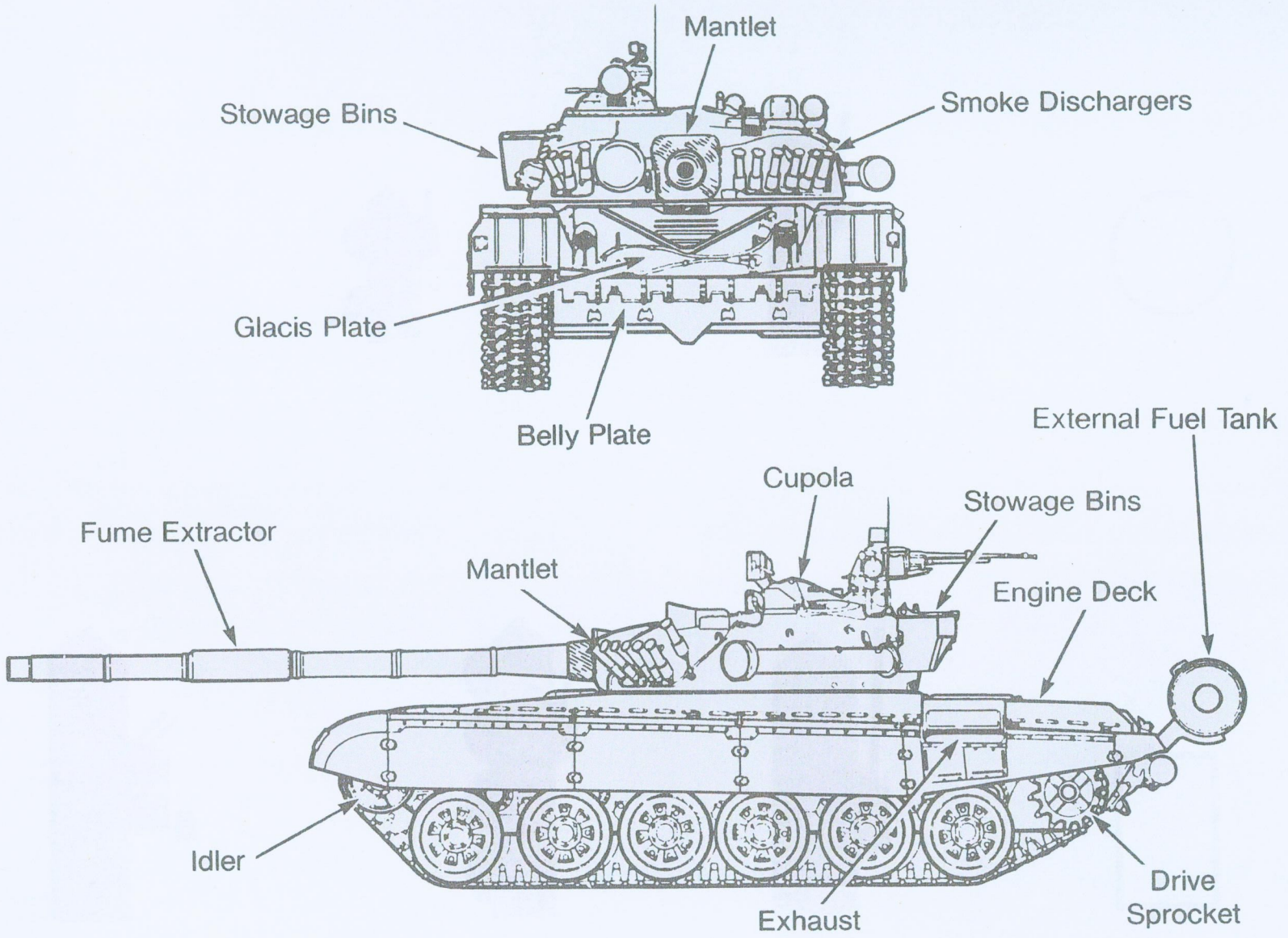

Fig 128. — Main AFV Identification Features

RESTRICTED

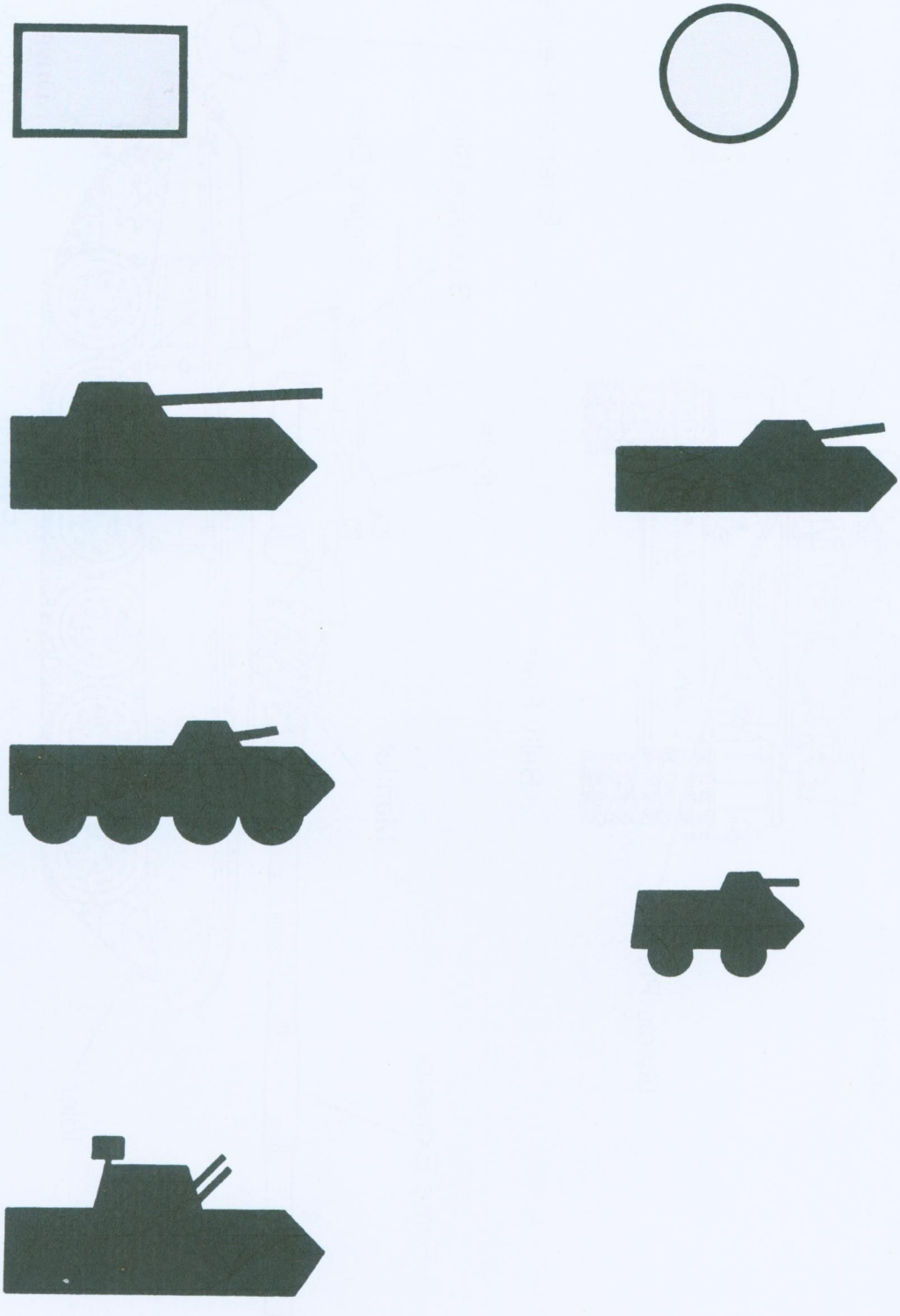

Fig 129. — Symbols for Preliminary AFV Identification Lesson

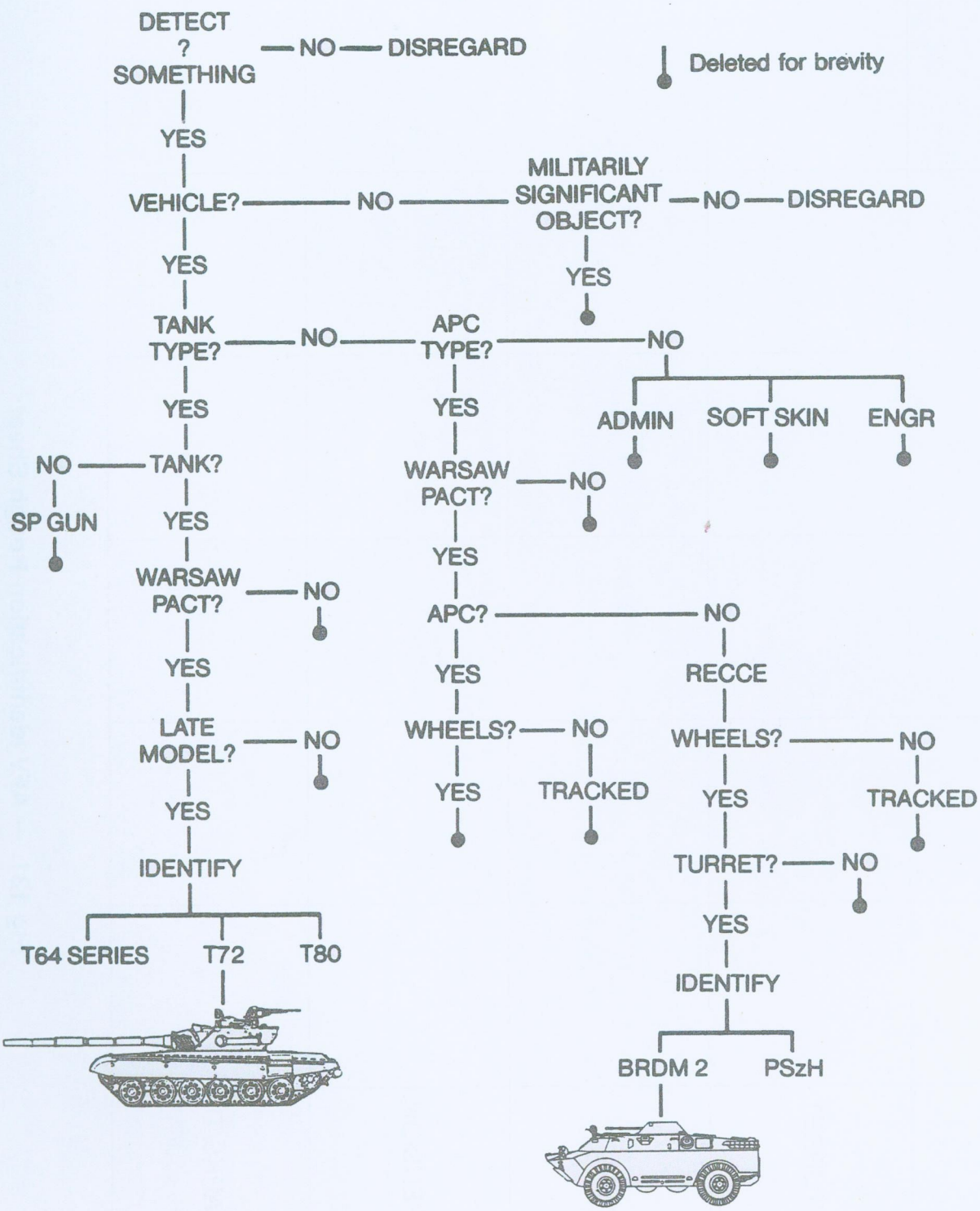

Fig 130. — The Logic Tree, AFV Identification Instructor's Aid

GUN/TURRET						
HULL						
SUSPENSION						
REMARKS/TI						

Fig 131. — AFV Identification Rough Sheet

RESTRICTED

AFV DATA SHEET	
Vehicle	Nationality
Variant	
Role	
TECHNICAL DETAILS	
Length	Line Drawing
Width	
Height	
Weight	
Speed	
Crew	
Main Armament	
Secondary Armament	
Amphibious	
IDENTIFICATION FEATURES	
Gun/Turret	
Hull	
Suspension	
TI Signature	
REMARKS	

Fig 132. — AFV Data Sheet

SECTION 14. — PRELIMINARY LESSON ON CLASSIFICATION

A. INSTRUCTOR'S NOTES

0618 ***Aim.*** *To teach soldiers how to recognize (not identify) a tank, a tracked APC, a reconnaissance vehicle and an air defence vehicle.*

0619. ***Timings.*** *One 40 minute period.*

0620. ***Method.*** *A basic instructional indoor lesson.*

0621. ***Stores.***

Slides of symbols at Fig 129
Models (tank, APC, reconnaissance and air defence vehicles)
AFV silhouette on large card
Landscape

B. CONDUCT OF THE LESSON

Introduction

0622. *Explain:* Why the details of the AFVs are taught. Relate this to the operational requirements of the unit. Show what is meant by classification, e.g., *"That is a tank", "That is an APC".* This process is simple and the basis for recognition and identification, e.g., *"That is a T72", "That is a BMP".* Once this classification basis is established, it is then possible to move onto the more demanding skills of recognition and identification.

Classification

0623. *Demonstrate the method that is going to be used to teach classification. The aids are at Fig 129.*

a. *Show slide of circle. Ask squad "What is it?".*

b. *Show slide of square. Ask squad "What is it?".*

0624. *State:* You have just been taught recognition. For you to state what the image is, you have to be familiar with shape.

0625. *Explain:* Recognition of AFVs follows the same principle. All you have to remember is five basic shapes. *Display each slide in turn.*

a. *Slide of Tank. Ask squad "What is it?". (Give squad time to absorb image.)*

b. *Slide of Tracked APC. Ask squad "What is it?". (Give squad time to absorb image.)*

c. *Slide of Wheeled APC. Ask squad "What is it?". (Give squad time to absorb image.)*

d. *Slide of Reconnaissance Vehicle. Ask squad "What is it?". (Give squad time to absorb image.)*

e. *Slide of Air Defence Vehicle. Ask squad "What is it?". (Give squad time to absorb image.)*

0626. *Do not mention any particular name, e.g., T64A. Confirm outlines by question/answer using slides.*

0627. ***Practice.*** *Recognize silhouettes on a large card of each vehicle in random order by encouraging squad involvement with question/answers. Leave large card with all five silhouettes on display, above landscape model, for model test.*

0628. ***Model Test.*** *Issue soldiers with binoculars and position the squad four metres, a simulated distance of 1200 metres, from the landscape. Place models of a tank, tracked APC, wheeled APC, air defence vehicle and reconnaissance vehicle (1:300 scale) on the landscape. Get each soldier to classify each model by comparison with the others. Remove card and repeat, with the squad writing down the answer.*

Conclusion

0629. *Emphasize* progress and that the skill of recognition now achieved is the basis for subsequent training in recognition and identification. *State again* that since AFVs look alike, soldiers must be able to recognize vehicles (as friend or foe) to avoid destroying friendly AFVs. Identification is to name the vehicle by the correct designation or common reporting name. *Example:*

a. *Recognize.* Recognize vehicle type (e.g., it is a tank type).

b. *Identify.* Identify by designation (e.g., it is a T64B), subject to the theatre and intelligence information, the decision would then be made as to whether the vehicle is enemy or friendly.

SECTION 15. — UNIT AFV SYLLABUS NOTES

General

0630. The vehicles taught in a unit AFV syllabus will depend upon its operational role and likely enemy organizations. The layout of a suggested unit AFV syllabus is split into six different learning methods to provide variety to the course. These are:

a.	Basic Lessons — including Thermal	19 x 40 minute periods
b.	Interest Periods	4 x 40 minute periods
c.	Practice Periods	5 x 40 minute periods
d.	Progress Tests	3 x 40 minute periods
e.	Revision	4 x 40 minute periods
f.	Assessment Levels — including Thermal Image	3 x 40 minute periods

0631. ***Interest Period 1.*** Introduce the 'Threat' which emphasizes the need for AFV identification.

0632. ***Lesson 1. — Introduction to AFV Identification.*** A lesson which explains the operational requirement for the subject and clarifies the difference between recognition — *"It is an enemy tank"* and identification — *"It is a T64"*. It should include the problems involved in identification, both manmade and natural, e.g., camouflage, distance, smoke, dust, light, etc. It should show the make up of an AFV, — four parts — gun, turret, hull and suspension along with the basic types of vehicle — tank, tracked APC, wheeled APC, reconnaissance and air defence vehicles. A demonstration of how vehicles should be taught along with examples of tests that will be conducted to show the standards that need to be achieved should also be included (40 minutes).

0633. ***Lessons 2 to 5.*** 4 x 40 minute periods.

0634. ***Basic AFV Lessons.***

a. Apart from Lesson 1 all basic AFV lessons are taught using three visual slides and three thermal image slides if available.

(1) Slide 1 — A clear close up ¾ front view.

(2) Slide 2 — A clear close up ¾ rear view.

(3) Slide 3 — A distant view which emphasizes the main features.

b. Slides 1 and 2 are used to point out the turret position and the main identification features which create shape, shadow and reflect light, starting at the top of the vehicle and working down to the base. In addition hot and cold spots of the vehicles should be indicated for natural progression to thermal image identification. Do not get too technical or involved in minor detail and do not place too much emphasis on suspension and antennae. Ensure that engine and exhaust positions are understood and the direction of the exhaust plume if applicable.

c. Slide 3 is used to confirm the teaching using question and answer technique.

d. Thermal image slides are used after the third visual slide to teach and confirm the thermal image features and signature of each vehicle.

e. Final confirmation of the whole period is conducted by placing 1:300 scale models of the vehicles taught in front of the squad. They then observe and compare the vehicles through binoculars. The instructor must encourage squad discussion at this stage.

0635. ***Interest Period 2.*** Visit to local armoured unit. Brief on tank, and opportunity to look over armoured vehicles. At this stage an alternative interest period can be devised around the 'Jigsaw' of the vehicles covered so far (½ day/40 minutes).

0636. ***Practice Period 1.*** This period should be split into two halves, binoculars should be used for both parts. During the first half, ten micro models of AFVs already taught should be placed out at six metres side on. The instructor should actively encourage discussion on the identification features. The second half of the period is conducted with the vehicles at seven metres, slightly turned, turret traversed. Again the instructor must encourage full participation and must carry out a debrief on each vehicle (40 minutes).

0637. ***Lessons 6 and 7.*** 2 x 40 minute periods.

0638. ***Practice Period 2.*** Conducted in a similar manner to Practice 1 but including some AFVs from Lessons 6 and 7 (40 minutes).

0639. ***Progress Test 1.*** Progress tests are an essential part of this teaching system to monitor and correct soldiers' progress. The test should be relatively easy and serve at this stage a secondary aim of morale boosting. This test should be conducted using 15 micro models. After completion of the test and collection of papers, the instructor must go through the test in a similar manner to the practice period (see Practice Periods 1 and 2) (40 minutes).

0640. ***Revision 1.*** This can only be prepared when the test papers have been marked and analysed — emphasis must be placed on the area of weakness (40 minutes).

0641. ***Interest Period 3 — Video Tapes.*** Several are available. One of particular relevance, covering the vehicles dealt with so far, is Soviet Airborne Training (40 minutes).

0642. ***Lessons 8 and 9.*** 2 x 40 minute periods.

0643. ***Practice Period 3.*** (40 minutes).

0644. ***Lessons 10 and 11.*** 2 x 40 minute periods.

0645. ***Practice Period 4*** (40 minutes).

0646. ***Progress Test 2.*** This should cover all AFVs taught. Those AFVs covered prior to Progress Test 1 should be presented with a higher degree of difficulty than those more recently taught. Use 20 micro models (60 minutes).

0647. ***Revision 2.*** Planned on similar lines to Revision 1 (40 minutes).

0648. ***Interest Period 4.*** Video Tapes (40 minutes).

0649. ***Lessons 12 to 15.*** 4 x 40 minute periods.

0650. ***Practice Period 5*** (40 minutes).

0651. ***Progress Test 3.*** Conducted on similar lines to Progress Tests 1 and 2, using 25 micro models (40 minutes).

0652. ***Lessons 16 to 20.*** 5 x 40 minute periods.

0653. ***Revision 3*** (40 minutes).

0654. ***Lesson 21. — Practical Identification.*** In this lesson the instructor explains that the soldier has the basic knowledge to identify vehicles. To ensure that a high standard is obtained a logic tree system for identification is explained, which eliminates, in a logical manner, all unwanted vehicles. This minimizes the chance of error and leads the operator to correct identification. Use the instructor's aid at Fig 137 (40 minutes).

0655. ***Assessment Levels.*** The standards and conditions for Assessment Levels 1 to 4 are laid down in ATD No. 9. MILAN platoon personnel are to achieve levels 2 to 4 depending on appointment (40 minutes for each level including debrief).

0656. ***Observation Exercises.*** These exercises are conducted using binoculars and models in various attitudes on a three dimensional terrain landscape. A time limit should be imposed for the completion of each exercise, e.g., 25 AFVs in 30 minutes. The soldier is required to plot each AFV's location and designation on a sketch map (*see* Fig 140). On completion the instructor should go through the exercise debriefing each vehicle with the soldiers observing through their binoculars.

a. *Observation Exercise 1.* Models set at 7 metres side-on in the open (representing 2100 metres).

b. *Observation Exercise 2.* Models set at 7 metres side-on but against camouflage (representing 2100 metres).

c. *Observation Exercise 3.* Models set at 7 metres at various angles with turrets turned (representing 2100 metres).

0657. The conditions and standards (with the exception of ranges) for the thermal test are as per ATD No. 9. To enable this test to be conducted as realistically as possible, video should be used.

SECTION 16. — AFV IDENTIFICATION USING THERMAL IMAGE

General

0658. The use of MIRA ensures that the MILAN operator will no longer be blind at night or handicapped in his ability to detect and identify AFVs in some daylight conditions.

0659. MIRA is an excellent piece of equipment but it does require the operator to adjust his mental image of an AFV to identify it correctly. This should present no great problems to an experienced operator who thoroughly understands what the AFV looks like under normal viewing conditions and has a good knowledge of the make up of the AFV.

0660. The degree of thermal signature emitted from an AFV is dependent on several factors:

a. Weather conditions.

b. Temperature.

c. AFV static or moving (warm up).

d. Whether armaments have been fired or not.

e. Whether viewing by day or night.

0661. As in normal visual identification, the best identification feature when viewing in thermal image is 'shape'.

0662. In a tactical setting the operator will be assisted by the intelligence input into his daily orders on which AFVs are likely to be operating in his area of responsibility.

0663. In normal conditions using the firing post optics or binoculars, MILAN teams are capable of providing a great deal of intelligence information by locating and identifying specialist AFV variants, e.g., PRP 3, BMP 1KSH, etc., out to ranges in excess of 2000 metres. With MIRA this degree of expertise will not be possible and the operator will revert to the basic designation, e.g., BMP. At closer ranges, however, the experienced operator may possibly provide correct identification of some variants of AFVs.

Instructor's Notes

0664. The method of teaching thermal image identification should conform to basic teaching and be taught with visual identification so as to maintain continuity of instruction. A suggested sequence of slides to be used to teach an AFV in both normal vision and thermal image is:

a. ¾ front close up (normal).

b. ¾ rear close up (normal).

c. Confirmation view (normal).

d. ¾ front close up (thermal image).

e. ¾ rear close up (thermal image).

f. Comparison slide (normal and thermal image).

0665. Progress tests can be conducted using videos or slides. These should include distance shots and shots taken under different weather and temperature conditions by day and by night.

0666. Assessment levels can be conducted using edited ten second video clips. If necessary this can be incorporated into assessment levels and progress tests where models are used.

0667. The success that the operator achieves with thermal image identification will still depend on how well he is taught the basics when dealing with normal identification. The information given by the instructor must include:

a. Engine position.

b. Exhaust position and plume.

c. Turret position.

d. Suspension.

e. Main armaments.

SECTION 17. — CONTINUATION TRAINING

0668. Continuation training must be conducted with imagination on the part of the instructor, otherwise soldiers will become bored. Competitions will help to overcome this, for example:

a. *AFV Tombola.* Bingo.

b. *AFV Jigsaws.* Timed efforts.

c. *Quiz Boards.* Detachment competitions.

d. *Tank of the Day.* A rifle company competition over, say, a one/two month period, with a prize for the winning platoon.

e. *Fire Control Exercise.* Stress exercise designed to identify the operator's decision making ability.

f. *Fire Control Test.* Designed to test MILAN detachments in fire control.

0669. The range of ideas is limitless but whether teaching a basic lesson or conducting a continuation training activity the success of the training syllabus will depend on the instructor having conviction in what is being taught, enthusiasm for the subject and the necessary dedication to succeed.

AFV ASSESSMENT

Name: .....

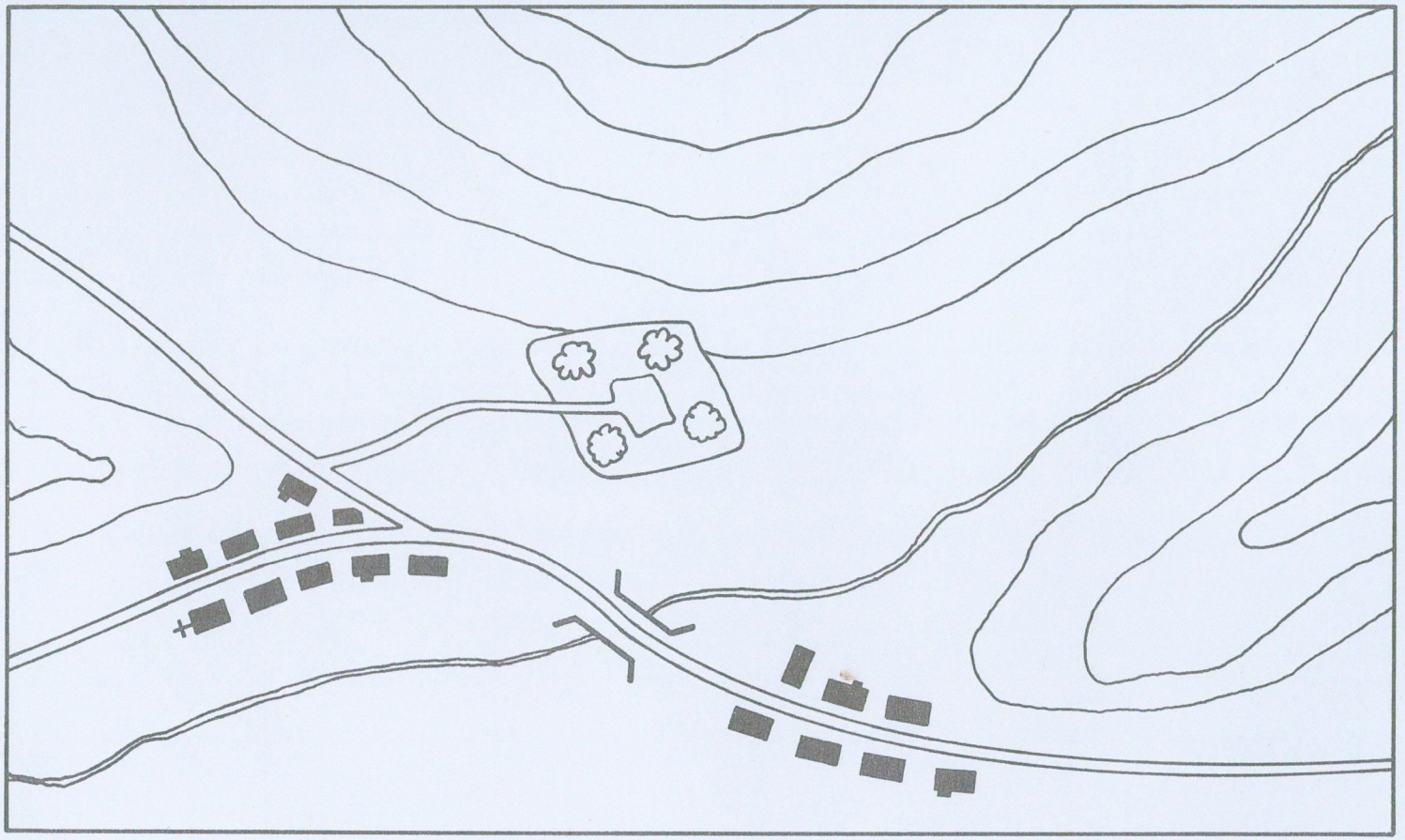

Note: 1. Indicate position of vehicle with an 'X' and put designation by the side, e.g., 'X' — 'T62'.

2. Time limit — 20 minutes.

Fig 133. — AFV Observation Exercise/Test Layout

SECTION 18. — SOURCES FOR AFV IDENTIFICATION TRAINING MATERIAL

0670. The sources for AFV identification material are divided into two categories. Material which will require purchase, and material which can be obtained through service channels.

0671. ***Materials which can be Purchased.***

Serial	Publications/Models	Remarks
	Publications	
1	Soldat und Technik	Monthly magazine in German. UMSHAU VERLAG, STUTTGARTER STR 18–24 FRANKFURT
2	Jane's World Armoured Fighting Vehicles	Christopher Foss Macdonald and Jane
3	Soviet War Machine (2nd Edition)	Hamlyn
4	Taschenbuch der Panzer	FM Von Senger Uno Etterlin VF Lehmanns Verlag Munchen
	Models	
5	Scotia Micromodels 32 West Hemming Street, Letham, Angus, Scotland, DD8 2PU Tel: (030–781) 494	1:300 scale (All SWW syllabus)
6	MILTRA, 357 Uxbridge Road, Rickmansworth, Hertfordshire	1:100 scale High standard of fidelity.
7	Denzil Skinner & Co Phoenix Works, Hartley Wintney, Near Basingstoke, Hants Tel: Hartley Wintney 2637 or Heckfield 238	1:96 scale Less detailed than Miltra.

0672. ***Materials Obtainable Through Service Channels.***

Serial	Item	Remarks
1	AGAI 3/73 Para 7618	Refers to units being able to submit to SSVC material for making into slides — 150 slides per unit year
2	Ref No. W6/6750–90–200–5228	Colour slide film issued to enable units to photograph vehicles on exercise
3	Joint Service Recognition Journal, AFPS Pubs 3, Bldg 10 Royal Arsenal West, Woolwich, London SE 18	Contains test — vehicle lessons — December issue lists SSVC material available
4	Posters	Demand on Form AB222A to Forms and Publications Branch, Donnington
5	AFV Identification Pamphlet No 4	Code No. 70765 Demand to Forms and Publications Branch, Donnington
6	Technical Intelligence Review	Issued in Restricted and Secret editions (t brigade and possibly unit level)
7	Slide Projector	From SSVC 'Kodak Carousel' SSVC Ref No. 850000
8	Slide Holder	Glass faced slide binder issued on request by SSVC. Demand is — Slide holder 36 mm x 24 mm. SSVC Ref No. 800003
9	JARIC	Series of cards dealing with AFV, Ground Equipment, Aircraft, Ships

Chapter 7

BATTLE PROCEDURE AND TACTICS

SECTION 19. — GENERAL

Introduction

0701. MILAN was originally designed for use in defence in a rural environment. The characteristics of any wire-guided anti-tank missile mean that its use in all operations is likely to be defensive in nature; it must always be employed in such a manner that its maximum range is brought to bear on the enemy without itself being observed or compromised by enemy direct fire weapons, and that inevitably implies defilade positions. By moving it swiftly around the battlefield, however, or by mounting it in carrier vehicles or helicopters, MILAN can play a significant role in all phases of war, and it should not be thought of as a purely defensive weapon system.

0702. Guidance on MILAN's roles in the various phases of war can be found in AFMs and TAMs, and details of current ORBATs are contained in the Staff Officers' Handbook. The duties and capabilities of MILAN commanders and operators are listed in Infantry Employment Volume 5.

0703. This chapter details various tried and tested drills and tactical guidelines for the use of MILAN, and is designed to supplement material already published in the pamphlets listed above and currently taught at the Anti-Tank Division, WTC.

SECTION 20. — PLANNING THE ANTI-ARMOUR DEFENCE

Introduction

0704. The MILAN Platoon Commander is trained to plan anti-armour operations at battle group level for all phases of war. However, because of the characteristics of MILAN and the need to maximize the effectiveness of the weapon through detailed siting and coordination, the MILAN platoon commander will be of greatest assistance to his CO in defensive operations. He is able to give his CO positive advice about an enemy's likely strengths, capabilities, speed and tactics. The MILAN platoon commander should, therefore, always be involved in the estimate process for battle group defensive operations against an armoured threat, and his contribution to the Intelligence Preparation of the Battlefield (IPB) will be of significant value to COs.

0705. The role of the MILAN section commander is to site in detail the MILAN firing posts under his command, after the platoon commander has indicated the killing areas he wants to be covered, and the approximate locations of the firing posts to cover them.

Procedure

0706. The procedure for planning the anti-armour defence is as follows:

a. Platoon commander's map appreciation.

b. Platoon commander's ground reconnaissance.

c. Coordination.

d. Final plan.

Map Appreciation

0707. ***Basics.*** The method used by the MILAN platoon commander to make a map appreciation and plan is a simple application of his own map reading ability and knowledge of weapon capabilities to known or anticipated factors. Before starting his map appreciation, he should prepare four clear plastic overlays on his coordination board: the first for the BG outline plan, the second for the intervisibility study, the third for the difficult ground study and assessment of likely enemy routes and the final overlay for his outline plan showing likely killing areas and detachment locations. A detailed explanation of the coordination board can be found in Lesson 21.

0708. ***Appreciation Process.*** His first step is to carry out a combat estimate of the task facing him. As well as the usual factors, he should consider the following points:

a. The mission and specific tasks of the anti-tank platoon.

b. The commanding officer's concept of operations and point of main effort, including the outline battle group layout.

c. Ground and obstacles; vital ground and key terrain and how to cover the approaches to it.

d. The enemy, and the general areas in which it is to be killed.

e. The assets available to the battle group.

f. Logistics.

At the end of this process, the platoon commander should mark on the first of his overlays the outline deployment for the battle group.

0709. ***Intervisibility Study.*** He then produces an intervisibility study from his map by marking significant contour lines in prominent colours so that he can see at a glance the shape of the ground. This is done on the second of the overlays. It is

important that this study extends at least 2 kilometres beyond the battle group's TAOR, so that the effect of the ground on approaches to and routes out of the TAOR can be taken into consideration.

0710. ***Difficult Ground and Enemy Routes Study.*** On the third overlay, the MILAN platoon commander marks ground which he considers will be an obstacle to armoured vehicles. From the information he now has, combined with his knowledge of likely enemy tactics and equipments, he should be able to estimate likely enemy routes into, through and out of the battle group TAOR, and he marks them also onto the third overlay.

0711. ***Enemy Assessment.*** At this stage, the MILAN platoon commander should refer back to his combat estimate to decide likely strengths of enemy along the various routes he has assessed will come within his area of influence. When related to the likely objectives of the enemy, this will enable the platoon commander to deduce the balance of anti-armour weapons needed to cover the routes.

0712. ***Killing Areas (KAs).*** Next he examines the ground from the defender's point of view. He considers all the principles of defence and relates them to the ground he must fight on. This, when related to conclusions drawn in paragraphs 0710 and 0711, should tell him where his KAs should be sited. He marks these on the last overlay.

0713. ***Selection of Weapon Systems.*** He then selects the appropriate weapons system to cover each KA in terms of range, characteristics and numbers to defeat the perceived enemy likely to enter the KAs. If he has insufficient weapons to cover all KAs, the less important ones will be covered as secondary tasks.

0714. ***Final Trace.*** Finally he produces a trace which shows:

a. The KAs selected.

b. The weapons which will cover those KAs, and in what strengths.

c. The likely positions from which they will do their tasks.

An experienced MILAN platoon commander can get to this stage in half an hour.

Ground Appreciation

0715. ***Preliminaries.*** Before he goes on his ground reconnaissance, the platoon commander must confirm that his commanding officer approves the outline plan.

0716. ***Method.*** The ground reconnaissance should be planned to confirm the suitability of KAs and selected weapon locations in general terms, to consider gaps and potential contingency plans and make necessary adjustments to the plan. The platoon commander must leave sufficient time to return to battle group headquarters

well before the commanding officer's preliminary orders. The reconnaissance may be carried out either by helicopter or vehicle, and will concentrate on ground role dug-in MILAN positions first. The platoon commander must confirm that he has set his section commanders realistic and achievable tasks. When he returns to battle group headquarters, the platoon commander will prepare a briefing for his commanding officer which includes details of the weaknesses in the plan and how he suggests that they are overcome.

0717. ***Traces.*** He then produces traces of his plan in 1:50,000 scale which show each KA, who is to cover it and approximately from what position. Each MILAN section commander requires such a trace and the rifle company commanders to whom they are attached should be given them before the commanding officer's preliminary orders start. If the platoon commander has time he can expand on the information given on the trace by using a set of attached notes giving callsigns and tasks, the grid references of their likely positions, notes on fire control, and any secondary tasks.

Coordination

0718. ***After the Commanding Officer's O Group.*** After the commanding officer's O group normal battle procedure will be followed. The MILAN section commanders should accompany their respective rifle company commanders on their reconnaissances to site and mark the precise location of each MILAN trench on their coordination boards (*see* Section 5)

0719. ***Troubleshooting.*** The MILAN platoon commander should then visit each of his section commanders to assist in sorting out any difficulties. When the section commanders have completed their detailed siting, the platoon commander copies the section commanders's coordination templates onto his own, and thus coordinates the battle group plan. On return to battle group headquarters he plots any adjustments onto a new coordinated trace ready for issue at the coordinating conference. A copy of this trace should be sent to brigade headquarters.

0720. ***Confirmatory Orders.*** The MILAN platoon commander's contribution to confirmatory orders should cover:

a. Significant changes to the original plan.

b. Details of movements to secondary or tertiary positions.

c. Contingency plans.

d. Details of fire control including priorities of engagement and authorities for opening fire.

Conclusion

0721. The principles of anti-armour planning are based on logic and the estimate process. Once the MILAN platoon commander has completed the stages outlined above, the commanding officer can expect to have a sensible plan which maximizes the effectiveness of MILAN, as well as some useful groundwork for the preparation of the battle group STAP.

SECTION 21. — MILAN SITING CONSIDERATIONS

Introduction

0722. In addition to the principles of defence, the MILAN platoon commander has to consider a number of additional factors when planning the anti-armour defence with MILAN. These factors, with the principles of defence, are called the MILAN siting considerations. It is essential that he knows and understands them, otherwise he is likely to allocate KAs to his section commanders which are unworkable.

0723. The MILAN section commander is trained to give detailed advice to his company commander on the siting of MILAN. He has to site in detail, and his application of the siting considerations will be crucial to the success of anti-armour operations with MILAN.

0724. The MILAN detachment commander must also be aware of these considerations so that he can deputise for the section commander when necessary. In assembly areas detachment commanders are required to carry out siting by themselves, although in a confined area they will not be able to take full account of all considerations.

0725. ***Siting Considerations.*** The siting considerations comprise the principles of defence plus the following:

a. Defilade.

b. Protection.

c. Fields of fire and killing areas.

d. Temporary, alternative and secondary positions.

e. Rear danger area.

f. Launch dispersion.

g. Distance between posts.

h. Vehicle positions.

i. Snow conditions.

j. Overpressure.

Principles of Defence

0726. ***Depth.*** Depth will allow increasing numbers of anti-armour assets to engage decreasing numbers of enemy vehicles, and will often be essential to the achievement of the mission.

0727. Depth is achieved by deploying the available assets throughout the battle group area. Mobile MILAN may be deployed initially with the guard force, and move back at the appropriate moment to provide additional strength to depth positions; or it may be used for flank protection, thus giving increased depth to the main position. Dug-in MILAN should be deployed throughout the battle group area to cover the enemy routes through the position. Some dug-in MILAN might redeploy to secondary positions, should the situation allow, and thus provide extra depth.

Mutual Support

0728. Mutual support is necessary to overcome the relatively slow rate of fire of MILAN and to allow for casualties and obscuration. Thus each KA should be covered by a minimum of two MILAN. Detachment KAs should be sited so that they complement each other and thus provide mutual support.

0729. Where a KA is particularly important, the section commander's firing post could be brought under command of the detachment commander to strengthen the coverage. It would be manned by the No. 1 with the detachment driver acting as No. 2. This leaves the section commander free to command the section.

0730. MILAN teams may need to be mutually supported by short range anti-armour weapons to cover the near limit and any dead ground in their KAs.

0731. MILAN teams are likely to be isolated on the battlefield, and need good communications.

0732. ***All Round Defence.*** MILAN must be deployed to cover the main tank threat on the routes through the position. However, the threat of outflanking and encircling tactics must not be forgotten. All round defence can be achieved by using short range weapons, secondary tasks and mobile assets.

0733. ***Deception and Concealment.*** Survivability on the battlefield will depend to a great extent on concealment. Once MILAN opens fire from its permanent position, the defensive layout is to a large extent compromised. It is, therefore, important that weapons remain concealed and hold their fire until the last possible moment, creating surprise and an ambush effect; skilful defilade siting will help to achieve this. Clear orders for opening fire must be given for each phase of the battle.

0734. Concealment presupposes good fieldcraft. Use available cover to conceal the weapon position from the air as well as from the ground. Look at potential fire positions from the enemy's point of view. MILAN teams should be practised in the preparation of overhead protection — deturfing, camouflage of spoil and the use of nets to eliminate shadow.

0735. ***Offensive Spirit.*** The offensive spirit is achieved by using the maximum range of MILAN and by ensuring that the fire control system offers every firing post the opportunity to engage as many enemy AFVs as possible. MILAN should not be thought of as static on the battlefield, and the selection of sensible secondary and alternative positions will help to promote offensive spirit.

0736. ***Reserves.*** The MILAN platoon commander should always look for ways of creating a reserve with his assets. In conventional positional defence, his may require mobile MILAN to take up depth positions during the main defensive battle, and to be earmarked as a reserve. Under some circumstances, the commanding officer might consider retaining some or all of his MILAN firing posts in reserve if, for example, he felt that the likely armoured threat against him could be contained by other assets such as tanks.

MILAN Siting Considerations

0737. ***Defilade.*** A defiladed position is one which the enemy cannot engage with direct fire or observed fire without himself being within the weapon's KA. Defilade can be described as 'soft' or 'hard', but it should be noted that soft defilade does not provide cover from direct fire, and should therefore be avoided where possible.

0738. ***Advantages.*** The advantages of a defilade position are:

a. Cover from view, and therefore observed indirect fire.

b. Protection from direct fire until the crew is capable of retaliation.

c. Concealment of the weapon signature.

d. An ambush and surprise effect against the enemy vehicles.

e. A larger target to aim at.

f. Thinner side armour against which to effect a kill.

0739. ***Disadvantages.*** The disadvantages are that:

a. The enemy vehicles may be well into the battle group area before they are engaged. Thus depth and mutual support are essential.

b. The targets move quickly and open fields of fire are necessary.

0740. Defilade is one of the most important siting considerations for MILAN, and head-on shoots should be avoided where possible.

Protection

0741. MILAN crews need protection from suppressive fire, e.g., artillery, FGA and helicopter gunships and also against infantry attack. Hard defilade will help, but MILAN must be dug-in with good overhead protection. Obvious positions, whether on a map or to observers, should be avoided.

0742. MILAN crews will often be sited away from rifle company positions in order to maximize their fields of fire. Infantry approaches to MILAN positions may have to be covered by small arms fire, and mortar DFs and anti-personnel mines may also be employed. By night or in bad visibility infantry may have to be collocated to provide close defence. However, MILAN detachments must be prepared to provide their own close protection with small arms and LAW.

Fields of Fire and Killing Areas.

0743. MILAN must have relatively open fields of fire to overcome the time of flight limitation and this prevents engagement of fleeting targets.

0744. MILAN should be sited to cover a realistically sized KA. The ideal width is 600 – 1000 metres. Any wider than this may result in a dug-in firing post being unable to cover the KA because of its overhead protection.

0745. The effects of dead ground must be considered. The MILAN platoon commander should consider alternative options for covering dead ground such as LAW, minefields or DFs.

0746. Power lines and high tension cables should not present problems to MILAN as the trajectory from launch is fairly flat and missiles should pass underneath cables. Close proximity to cables will not affect the missile, but if the guidance wire hits a high tension cable, the equipment and firer are at risk.

Temporary, Alternative and Secondary Positions

0747. Temporary positions must be occupied whilst the main position is being prepared. MILAN must be 'in action', camouflaged and covering the same KAs as the main position.

0748. Alternative and secondary positions should not be investigated until the main position is being prepared. Alternative and secondary positions should be as fully prepared as time and materials permit.

Rear Danger Area

0749. The operational danger area must be applied, particularly if sited near woods, buildings or troops.

Launch Dispersion

0750. All missiles fly relatively straight on launch and up to approximately 75 metres, and then deviate either high or low. Consideration must be given to siting the firing post in a position where the ground drops away from the firing position and is clear of overhanging branches; uphill shoots should be avoided.

Distance Between Posts

0751. The distance between posts depends on the ground. Both posts should be able to cover the same KA, but they should not be close together and can be up to 150 metres apart. This lessens the effect of artillery suppression on the detachment as a whole, and eliminates the possibility of decoy.

Vehicle Positions

0752. Vehicles should be sited in dead ground and camouflaged as protection against enemy TI devices and air reconnaissance and, if possible, sited behind hard cover for protection against suppressive fire. Depending on the tactical situation and the type of vehicle, they should be reasonably close to firing post positions to help assembly and withdrawal on redeployment. Vehicle routes must be thoroughly reconnoitred by day and night.

Snow Conditions

0753. On launch, the blast produces a significant black mark behind the firing position and in soft snow quite a lot of snow dispersion. Siting in defilade will overcome most of the problems. Firing posts and ammunition should be painted white and use must be made of white camouflage nets. To prevent the firing post sinking, snow should be packed hard and white camouflage material spread under the tripod legs to distribute the weight. The problems of coordination are more difficult because it takes longer, particularly in areas inaccessible to vehicles.

Overpressure

0754. Section commanders must be careful not to site MILAN in buildings in which the overpressure on missile launch could endanger the crew from falling masonry. In any building, the overpressure blast will raise considerable amounts of dust and this

could limit MILAN to being a one shot weapon. It is operationally safe to fire from beneath overhead protection on trenches subject to observing the critical measurements and methods of construction.

Summary

0755. The MILAN siting considerations can be summarized by asking:

a. Can I do my task?

b. Can I survive?

If the answer to both questions in 'Yes', the selected position is likely to be effective.

SECTION 22. — FIRE CONTROL

Introduction

0756. If MILAN is to be successful against enemy AFVs and missiles are not to be wasted, there must be an effective system of fire control. There must also be flexibility in the system to allow junior commanders to use their initiative.

0757. MILAN crews will usually engage selected specialist vehicles first. In a situation where our tanks are not committed to the battle at the same time as MILAN, infantry may have to use MILAN against tanks. The considerations for siting MILAN to enable them to do this effectively are covered in Section 21 above.

Factors

0758. There are four factors which make up the fire control system for MILAN. These are as follows:

Killing Areas (KAs)

0759. All anti-armour weapons should be allocated KAs. Where KAs overlap, or are covered by several weapons, reference points should be mutual. If there is a considerable overlap of KAs, it will be necessary to modify the priority of engagement of one or more of the same priority target by different detachments covering the same area. Targets in KAs should be divided, or allocated a priority to suit the different weapon systems covering the KA. All weapons should have battle cards showing the detail explained in Lesson 21.

Priority of Engagement

0760. Because MILAN teams have relatively few missiles each one must do as much damage to the enemy as possible — thus a battalion command vehicle will be a more attractive target than an infantry section APC. All weapons must be allocated a priority of engagement to suit their characteristics and the particular mix of anti-armour weapons available.

Fire Control Methods

0761. ***General.*** The two most common methods of fire control are the key point method and the lead vehicle method, and these are outlined below. It should be stressed, however, that MILAN operators are not bound to use these methods exclusively; any system which ensures the maximum effectiveness of MILAN may be used, provided that it is understood and practised by all operators.

0762. ***The Key Point Method.*** The key point method works as follows:

a. The key point is an imaginary point in the middle of an enemy AFV formation which equates to the centre of mass of the formation. The KA can then be divided, either vertically or laterally, and the two firing posts select targets from their priority of engagement within their half of the formation.

b. Note that the key point is not a point on the ground, and will move with the enemy formation. Note also that this method is not the same as splitting the killing area in half; rather it is a means of ensuring that different firing posts select different targets from within the same KA, and thus avoid duplication of effort.

0763. ***The Lead Vehicle Method.*** The lead vehicle method operates along the following lines:

a. The firing post furthest from the expected direction of advance of the enemy (usually the less experienced of the two operators in the detachment) will always engage the lead vehicle as it enters the KA. The firing post nearest the enemy direction of advance (usually the DC or more experienced operator) is then free to engage targets in the main body of the formation in accordance with the given priority of engagement.

b. If the enemy enters the KA from an unexpected direction, the less experienced operator will still engage the lead vehicle.

0764. ***Multiple Weapon Systems.*** In the event of more than one MILAN detachment firing into a KA, it is important that a system of fire control is evolved which maximizes the effectiveness of MILAN. One solution is that firing posts within detachments operate the lead vehicle method, but that detachments within a section operate the key point method. Whatever solution is adopted should be as simple as pos-

sible and should ideally not require coordination by radio to implement: most commanders will be too busy killing tanks to have to carry out quick reappraisals.

Authority to Open Fire

0765. Orders to open fire should be given in accordance with the STAP measures outlined in USOP 602. The three possible states for MILAN are D1, D2 or D3.

a. *D1.* D1 restricts MILAN to firing only with permission from the commanding officer. This state is only likely on OPs or standing patrols, or in peacekeeping operations.

b. *D2.* D2 allows MILAN to be fired only when under direct fire or in self-defence. It might be employed during defensive operations when there is a risk of friendly forces being engaged by mistake (for example, during the withdrawal of the guard force), or to retain surprise.

c. *D3.* D3 allows MILAN to engage any target within its KA. This state should normally be employed during the main defensive battle phase.

0766. It is VITAL that MILAN teams are also told when they may open fire in the event of a communications failure — the fail-safe method. This can be achieved by pre-planning; for example, if the enemy reach a certain line on the ground, all weapons go to D3; but it must be covered in confirmatory orders.

Conclusion

0767. The fire control systems outlined above will not cover all circumstances because of the possibility of fleeting targets, decoys, etc., but it will ensure that most missiles are as effective as possible, and it should increase the surprise and ambush effect.

0768. To overcome difficulties of ECM, as much of the fire control system as possible should be pre-planned. Field telephones will provide facilities for secure communications but even these could be disrupted by artillery fire. Once deployed, MILAN teams must have sufficient information to engage the enemy effectively even if they receive no further orders. It is then the DC's and No 1's responsibility to implement the fire control plan to the best of their ability.

Fire Control Plans

0769. Each battalion should devise workable fire control plans adaptable to any situation. These should be incorporated in SOIs and be practised frequently by all members of the MILAN platoon.

Fire Control Training

0770. *See* Chapter 5, Section 5.

ANNEX A

RECOMMENDED SEQUENCE OF INSTRUCTION

1. The lessons in this pamphlet do not appear in the recommended sequence of teaching as listed below:

Sequence	Lesson No.	Title
1	1	MILAN Characteristics
2	3	The Firing Post and Logistic Container
3	2	MIRA Principle of Operation and Characteristics
4	5	Ammunition and Logistic Container
5	4	MIRA and Tactical Container
6	6	Firing Sequence and Basic Guidance
7	7	Target Selection and Aiming
8	8	MIRA Fitting and Operation
9	12	Storage and Maintenance
10	9	Introduction to Drills
11	10	Action and Cease Firing
12	17	General Description Simulator
13	11	Firing and Action on Misfire
14	18	Assembling and Dismantling the Simulator
15	13/14	Unit Tester Mk 1 or Mk 2
16	19	Uses of the Simulator and Battery Charging
17	20	Use of the Simulator with MIRA
18	15	Harmonization
19	16	MIRA Harmonization
20	21	Battlecards, Coordination Template Production

2. The list contains only lessons from this pamphlet; when planning a unit cadre, it is essential that allowance is made and time allotted for other allied subjects, e.g., map and air photograph reading, production of battle cards, AFV identification, etc.

3. Practice periods should also be included at various stages of training to ensure that the soldier has taken in the information he has been given and can become proficient in the skills he has been taught. The proposed sequence for each stage of a practice period is at Appendix 1.

4. Simulator training periods (details in Annex B) are to be included after Lesson 19.

APPENDIX 1 TO ANNEX A

THE PRACTICE PERIOD

General

1. The proposed sequence for each stage of a practice period is:

   a. Remind — By explanation.

   b. Assess weaknesses — By practice or test.

   c. Improve on weaknesses — By practice.

   d. Progressive practice — By competitions.

   e. Final practice — Covering the whole period.

2. The practice period is the best way of exercising soldiers during their basic training. The instructor should plan the period on an assessment of the soldier's weak points.

3. Faults should be immediately brought to the notice of the soldier and corrected, otherwise he will go on making the same mistakes.

4. It may become obvious during a practice period that the soldiers have failed to grasp a particular skill or fact. The instructor will, therefore, have to teach that part of the basic lesson again.

Competitions

5. The incentive of competition will always help to make practice more interesting. The whole of a practice period can be based on competitions if the instructor so wishes. Some points on framing competitions are:

   a. They may be on an individual or a team basis.

   b. If run on a team basis the instructor must ensure that the selected teams are all fairly equal as regards performance. The more advanced members of the team will help along the weaker members.

   c. Marks can be awarded up to a given total or a total started with and marks deducted for mistakes as the competition progresses.

   d. A chart drawn on a chalkboard or a sheet of paper on which to mark up results should always be used.

e. Further interest can always be attained by making one team or individual watch another, criticizing and awarding or deducting marks.

f. Above all the instructor must make certain that competitions are simple and realistic, i.e., that they exercise the soldiers in the facts and skills concerning their training.

Master and Pupil

6. The master and pupil method of practice in its simplest form is for one man (the pupil) to work under the supervision of another (the master); the instructor keeps an eye on both.

7. At all stages of training it stimulates interest, keenness and attention to detail. It is particularly useful with large squads and in competitions. Used regularly, it also develops initiative and leadership and potential leaders may well be discovered by watching the masters at work.

ANNEX B

SIMULATOR TRAINING

Introduction

1. ***Aim.*** The aim of simulator training is to provide the soldier with realistic and varied firing practice prior to firing a live missile. Thereafter the simulator is used as a means of practising tracking skills and enables the soldier to maintain and improve those skills learnt during training.

2. ***Practices.*** The simulator training practices at Appendix 1 are each based on a double period (2 x 40 minutes) with a ratio of six soldiers to one simulator. These practices should be conducted prior to training with spot simulation.

Training

3. ***Modes.*** The simulator can be used in either of two modes, i.e., 'Fictive target' or 'Spot'.

4. ***Fictive Target.*** This form of simulator training should be undertaken early in the soldier's training to enable him to grasp the basic tracking skills and should be introduced before using the 'Spot' with 'live targets'. Fictive targets should never be used as the sole means of training. It must always be combined with the training using 'live targets' and the 'Spot' facility. Care must be taken to ensure that the settings on the speed regulators produce realistic target movement. A table giving speeds and approximate settings is at Appendix 2.

5. ***Spot with Live Targets.*** This method is by far the best way of training a soldier to track targets. It uses actual targets moving at realistic ranges and simulates all aspects of missile firing. Careful control of target movement and speed is essential. If offset limits are used in this mode, they should not be set below 1 and 1. To decide whether the engagement is a 'Hit' or 'Miss', the instructor must watch to see if the spot is on the target when it brightens at the end of the engagement. The soldier should complete 150 simulated spot firings before annual live firing.

6. ***Alternative Targets.*** A number of alternative targets and systems of portraying them can be used with the 'Spot' facility to provide variety and interest in the soldier's training and as an alternative means of training in bad visibility or where ground for live target deployment is not available. None of them are as good as 'live targets'. The following methods should be considered where space and facilities permit:

   a. *The FMR Moving Target Gear No. 1 Mk 2.* Moving target gear is an alternative method of presenting targets, which can be permanently set up in barracks (space permitting) and used in inclement weather. However, it should not

be considered as a permanent substitute for training with live targets. Special care is necessary, when using the moving target gear during the simulator training practices, to ensure that the target's size is truly representative of a target at the simulated range. The formula required for scaling down target size is given in paragraph 10. The moving target gear is a self contained unit of robust construction which is easily transportable. It is powered by a 12 volt system which can be run from vehicle batteries. This makes it an ideal system for use as a concurrent activity during BEs and other forms of training or where there are no permanent training facilities.

b. *The Moving Target Fire Control Board.* This board can be used in conjunction with 1/300 scale micro models. Specifications for its construction are given in Fig 120.

c. *The Okeefe Trainer* (*see* Fig 134). This can be used in conjunction with 1/300 scale models to provide realistic simulator training.

d. *Cine Target Training.* This system, using the cine target equipment available in the training theatre or a 16 mm projector, could be of use during a soldier's continuation training and depending on the type of film available may be of use in practising fire control. As yet no suitable film is available.

e. *Model Railway.* A standard electric train set can be used to provide a vehicle on which to mount a target. Target speed would have to be carefully monitored to ensure realistic movement of the firing post whilst tracking.

f. *Battery Operated Model Tanks.* Suitable assembly kits can be purchased and realistic scale models constructed. These could be radio controlled. Training could be conducted on a sports field or parade ground and should be introduced as an interest factor during continuation training.

7. ***Pattern Board*** (*see* Fig 135) This board provides a means of practising basic tracking skills and does not require a simulator. It can be used as a concurrent activity. The board can also be used to assess the aptitude of recruits joining the MILAN platoon in which case the optical unit and instructor's eyepiece must be fitted to the firing post to monitor performance.

8. ***Closed Circuit Television.*** This is not a separate training facility but can be used in conjunction with the simulator during any form of simulator training. A camera attached to either the instructor's eyepiece or directly to the optical unit enables the instructor to monitor the firer's aiming and tracking by watching a TV monitor. This eases the problem of fatigue caused by constant monitoring through the eyepiece and enables other soldiers to watch each engagement.

9. ***Scaling Down, Speed.*** When the training area is too small to allow the deployment of target vehicles at the ranges suggested in the Simulator Training Practices, it is possible to reduce the range at which the target vehicles are deployed and scale

down their speed accordingly so that the firer's tracking rate is the same as it would have been at the longer range. The formula required to scale down the speed is as follows:

a. $\frac{R1 \times S}{R2} = TS$

b. Where:

R1 = Range at which the target vehicle is deployed

R2 = Simulator range setting

S = Simulated speed

TS = Target Speed, scaled down

c. Example:

R1 = 200 m

R2 = 1500 m

S = 30 km/h

$\frac{200 \times 30}{1500}$ = 4 km/h, the scaled down target speed.

10. ***Scaling Down, Size.*** Having reduced the target speed, realism can be further improved by scaling down the target size. A scaled down target replica should be pasted on a board and attached to the side of the target vehicle. This will give the firer a true representation of target size. The formula required to scale down the target size is as follows:

a. $\frac{R1 \times D}{R2} = TD$

b. Where:

R1 = Range at which the target vehicle is deployed

R2 = Simulator range setting

D = Dimensions of the target expressed in millimetres (average MBT is 6 metres long)

TD = Target dimensions, scaled down in millimetres

c. Example:

R1 = 200 m

R2 = 1500 m

$$D = \frac{200 \times 6000}{1500} \text{ mm} = 800 \text{ mm, the scaled down target length.}$$

d. The same formula can be used to work out the height of a target, e.g., the height of a T72 tank is 2.2 metres.

11. ***Concurrent Activity.*** To achieve maximum activity during simulator lessons, as many firing posts as are available should be deployed. Whilst the instructor is monitoring one firer using the instructor's eyepiece, the remainder of the squad should be employed tracking the target during 'live target' training or practising tracking using the pattern board during 'fictive target' training. In both cases this will increase the amount of practice that each soldier will have prior to live firing. Whenever possible the instructor should use members of the squad to apply new settings to the simulator, as this will help to familiarize them with the equipment.

12. ***Night.*** Simulator training at night depends for success on well planned and rehearsed deployment and movement of target vehicles. The following preparations should be carried out in daylight.

a. The area must be reconnoitred by the conducting officer, instructors and drivers to determine:

(1) The target vehicle runs.

(2) The positioning of ground initiated illuminants (e.g., trip flares).

(3) The firing post positions.

(4) The positions for the weapons producing light.

b. A check of communications between the firing post positions, target vehicles and weapon positions and a rehearsal of target vehicle runs and the procedures for producing light are essential.

c. The firing post and simulator must be set up and the optical unit aligned. The day/night switch should be checked to ensure that the batteries are functioning and the reticle is clearly illuminated.

d. When using the MIRA simulator attachments, the above points will also have to be taken into account to ensure worthwhile training.

Programming

13. ***Sequence and Scope.*** The soldier's first simulator practice should be done using the fictive mode and follow the suggested two practices at Appendix 1. These

will help the soldier to get used to tracking. During initial training all other practices should be carried out using a target vehicle. These practices should be progressive and start at maximum range using a slow speed and maximum offset limits. As the soldier improves so the practices should become more difficult by reducing the offset limits and range and varying the target speed and direction. Once initial training has been completed continuation training should be carried out using target vehicles, FMRs, Static and Moving Fire Control Boards with mini models. Using these the soldier can now be trained in the use of the 75 mil rule and aiming off for decoy. During these practices other skills can also be practised such as AFV identification and fire control. Whenever possible these practices should be conducted in the form of Battle Exercises either out of barracks on a training area or, if time and space do not permit, smaller Battle Exercises can be conducted in and around the barracks area. MIRA exercises will have to be conducted using live targets.

Summary

14. All simulator training requires careful planning if it is to be effective. Soldiers should be supervised and coached on each firing.

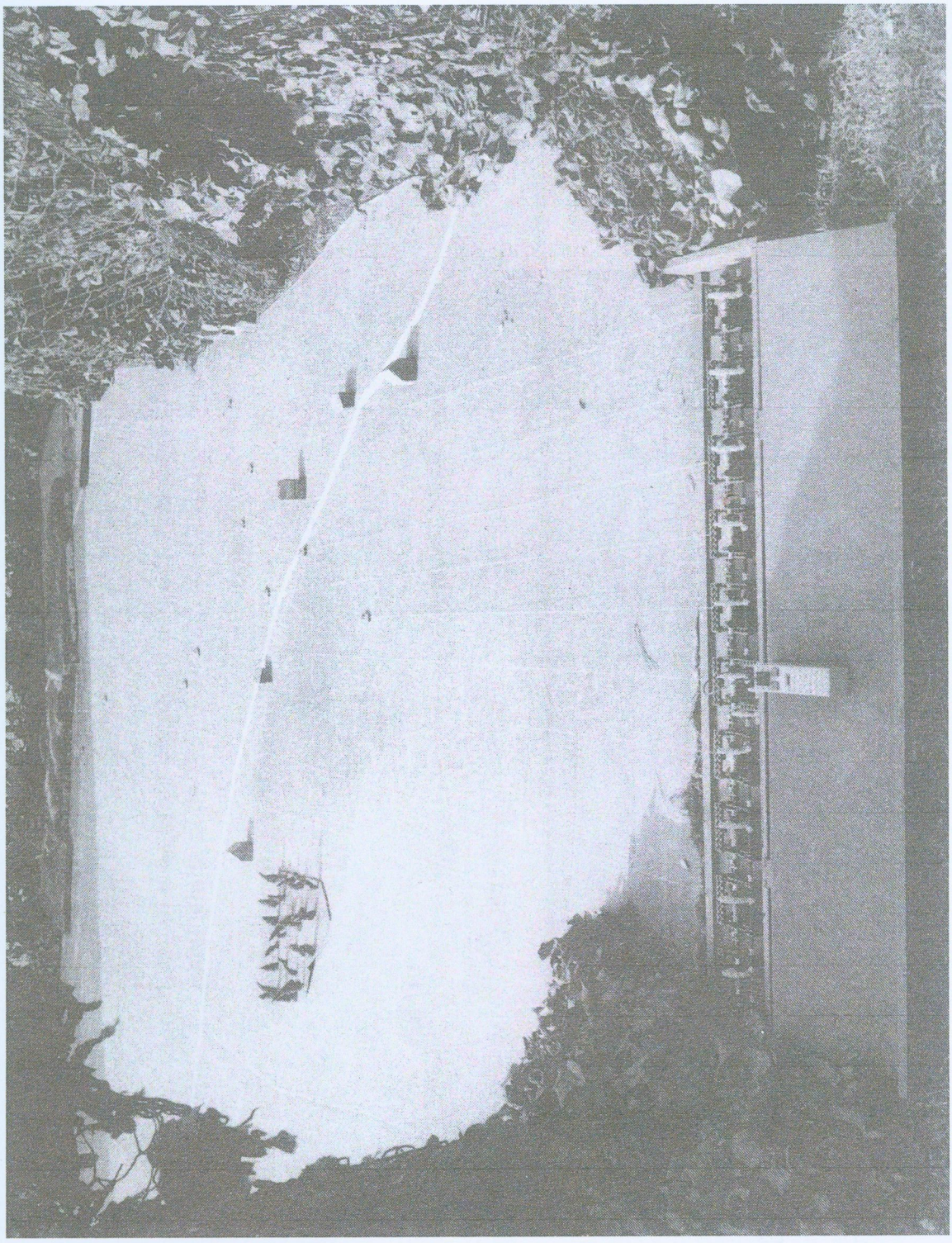

Fig 134. — The Okeefe Trainer

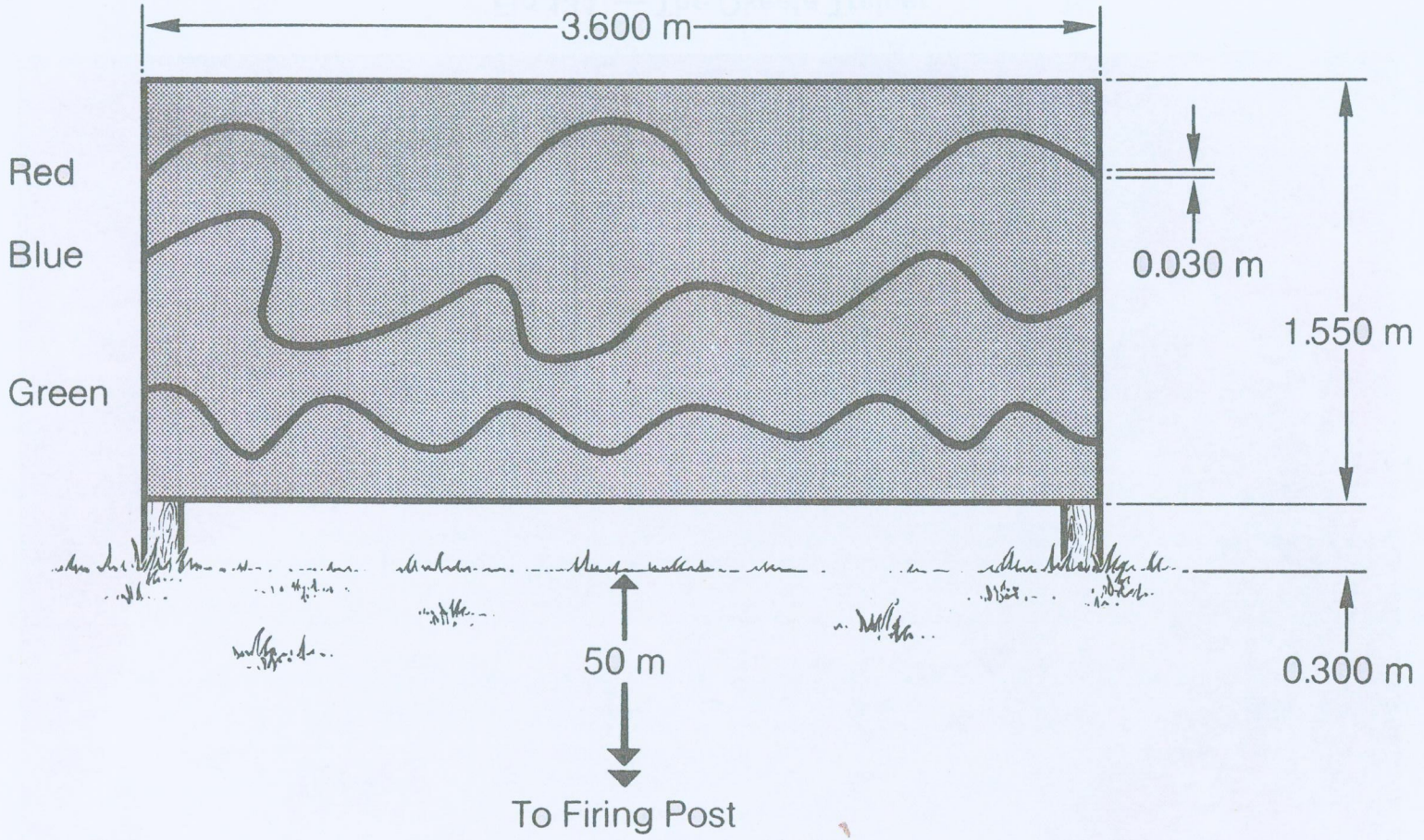

Note 1. Each line is to be approximately 30 millimetres wide and painted a different colour on a contrasting background.

2 The board is to be positioned at 50 metres from the firing post.

Fig 135. — Simulator Training Pattern Board

RESTRICTED

APPENDIX 1 TO ANNEX B

SIMULATOR TRAINING PRACTICES

PRACTICE 1. — FICTIVE TARGET

Serial	No. of Shots	Target	Smoke	Range	Sight Control Unit Settings					Target Description and Speed	
					Monitor	Target Speed		Offsets		Type	km/h
						El	Az	El	Az		
1	5	Fictive	—	1900	Last 200	0	R 2.0	2.5	3.0	→	14
2	5	Fictive	—	1900	Last 200	0	L 2.0	2.5	3.0	←	14
3	5	Fictive	—	1700	Last 200	0	R 4.0	2.5	3.0	→	25
4	5	Fictive	—	1700	Last 200	0	L 4.0	2.5	3.0	←	25
5	5	Fictive	—	1900	Last 200	U 1.0	R 2.0	2.0	2.0	↗	14
6	5	Fictive	—	1900	Last 200	U 1.0	L 2.0	2.0	2..0	↖	14
7	5	Fictive	—	1500	Last 200	D 1.0	R 3.0	2.0	2.0	↗	16
8	5	Fictive	—	1500	Last 200	D 1.0	L 3.0	2.0	2.0	↘	16

PRACTICE 2. — FICTIVE TARGET

Serial	No. of Shots	Target	Smoke	Range	Sight Control Unit Settings					Target Description and Speed	
					Monitor	Target Speed		Offsets			
						El	Az	El	Az	Type	km/h
1	5	Fictive	—	1500	Last 200	D 1.5	R 3.0	2.0	2.0	↘	22
2	5	Fictive	—	1500	Last 200	D 1.5	L 3.0	2.0	2.0	↙	22
3	5	Fictive	—	1300	Whole Trajectory	D 2.0	R 3.0	1.5	2.0	↘	14
4	5	Fictive	—	1300	Whole Trajectory	D 2.0	L 3.0	1.5	2.0	↙	14
5	5	Fictive	—	1100	Whole Trajectory	U 3.0	R 6.0	1.5	2.0	↗	24
6	5	Fictive	—	1100	Whole Trajectory	U 3.0	L 6.0	1.5	2..0	↖	24
7	5	Fictive	—	800	Whole Trajectory	D 3.0	R 12.0	1.5	2.0	↘	35
8	5	Fictive	—	800	Whole Trajectory	D 3.0	L12.0	1.5	2.0	↙	35

RESTRICTED

APPENDIX 2 TO ANNEX B

SIGHT CONTROL UNIT SETTINGS

Speed in km/h	Sight Control Unit Azimuth Setting				
	Range in Metres				
	2000	1500	1000	750	500
5	.5	–	1	–	2
10	1.5	2	3	4	6
15	2	3	4	6	8
20	3	4.5	6	9	12
25	3.5	5	7	11	14
30	4	6	8	12	16
35	5	7.5	10	15	20
40	5.5	8	11	16.5	–
45	6.5	9.5	13	19	–
50	7	10.5	14	–	–

Notes: 1. The above settings are approximations. They are not 100% accurate.
2. Where no setting is given, the crossing speed is either beyond the maximum tracking rate of the weapon or the setting is too fine to be applied.
3. The crossing speed can be determined accurately using the following formula

a. $$\frac{3.6 \times A \times B}{1000} = S$$

b. Where: A = Sight control unit azimuth setting

B = Computer range setting

S = Speed in km/h

c. Example: A = 2

B = 1900

$$\frac{3.6 \times 2 \times 1900}{1000} = 13.68 \text{ km/h}$$

ANNEX C

ALTERNATIVE VEHICLE DRILLS

General

1. The aim of this annex is to provide instructors with the additional information required to adapt Lesson 9. — Introduction to Drills to suit vehicles other than the 1 tonne vehicle fitted for MILAN. Instructors should select the appropriate paragraphs given here and substitute them for the equivalent paragraphs in Lesson 9.

FV 432

Vehicle Layout

2. ***Stowage and Seating.*** *Explain:* When the detachment are seated in the vehicle, the driver and DC occupy their normal positions in the vehicle and the DC's No. 1 and 2 sit on the left side of the vehicle near the rear door. The other No. 1 and 2 sit on the right side of the vehicle with the No. 1 nearest the rear door (*see* Fig 136). Both firing posts are positioned upside down in a bracket which is secured to the inside left wall of the vehicle. Before fitting, slings should be slackened, legs folded and tripod assemblies rotated so that the legs face the rear of the support assembly. The firing posts are locked in position by spring hooks attached to the bracket engaging over the support assembly ramps. They can be stowed with the MIRA mounting brackets fitted. Two MIRAs in their tactical containers are stowed in a box bracket on the left side pannier sill. Containers are held within the bracket by two expanding hooks.

Drills

3. ***Fall In.*** *Explain:* On the command *"Fall in"* the detachment double to their respective positions around the vehicle. The driver and DC on the right side of the vehicle level with their position in the vehicle and the two teams, No. 1s leading, at the rear sides of the vehicle with Team 2 on the right side and Team 1 on the left. All stand to attention facing the front (*see* Fig 137).

4. ***Mount.*** *Explain:* On the command *"Mount"* the detachment get into the vehicle, occupying the positions shown in Fig 136. It is the responsibility of No. 1 of Team 2 to open, close and secure the rear door once the last man is inside the vehicle.

5. ***Dismount.*** *Explain:* On the command *"Dismount"* the detachment resume their 'Fall In' positions. It is the responsibility of No. 1 of Team 2 to open the rear door and then close and secure it after the last man has left the vehicle.

Handling the Firing Posts and MIRA

6. ***Removing the Firing Posts.*** *Explain and demonstrate:* Firing posts must be removed in sequence; Team 1's post first. To remove the posts, disengage the spring hooks from the support assemblies and lift clear.

7. ***Replacing the Firing Posts.*** *Explain and demonstrate:* When replacing the firing posts, the lower post (Team 2's) must be replaced first. In each case the procedure is the same. Position the right side ramp of the support assembly in the two 'U' brackets ensuring that the rear of the carrying handle comes up against the stop on the bracket. Once the firing posts have been correctly positioned, stretch and engage the spring hooks onto the support assembly ramps.

8. ***Removing MIRA.*** *Explain and demonstrate:* Both MIRAs in their tactical containers are removed by undoing the securing hooks and withdrawing the containers from the bracket.

Handling the Ammunition

9. ***Taking Out and Replacing the Ammunition.*** *Explain and demonstrate:* The vehicle carries a total of 24 ammunition tubes. Ten ammunition tubes are stowed in the steel basket. Above it on the hinged tray, and extending into the left pannier sill, a further eight missiles are stowed in their pallets. These are secured by two adjustable web straps with hooks engaged to loops on the tray. Four ready for use ammunition tubes are carried on top of the two pallets and a further two are stowed on the floor of the vehicle. Once the ready for use ammunition tubes have been expended, two men are required to lift clear the pallets from the tray. The pallets are disposed of and any unfired ammunition tubes become ready for use. The securing straps, being adjustable, are used to secure any loose ammunition tubes to the top of the tray until they are expended and access to those in the basket is required. Access to the ammunition tubes in the basket is obtained by releasing the spring hook engaged in the loop on the basket, raising the tray and engaging the hook in the loop on the wall of the pannier sill.

Firing from the Vehicle

10. ***MILAN Pintle Mount.*** *Explain:* On issue, the MILAN pintle mount will be fitted on the commander's cupola. It will be possible to travel with the firing post fitted but not with an ammunition tube loaded. MILAN can be fired from the pintle mount. During peacetime training it is not permitted to travel with a firing post fitted.

¾ ton Landrover and Wide Axle Trailer

Vehicle Layout

11. ***Stowage and Seating.*** *Explain:* When the detachment are seated in the

vehicle, the driver and DC/No. 1 occupy the front seats and the No. 2 sits on the right side of the vehicle near the tailboard (*see* Fig 138). The firing post is stowed on a bracket fitted on the ammunition rack. It can be stowed with the MIRA mounting bracket fitted. Before fitting, the legs should be folded, the elevation handgrip depressed until resistance is felt and the sling loosened. A locking arm secures the firing post in position in the bracket.

Drills

12. ***Fall In.*** *Explain:* On the command *"Fall In"* the detachment double to their respective positions around the vehicle. Driver and No. 2 to the right side and the DC/No. 1 to the left side level with their positions in the vehicle. All stand to attention facing the front (*see* Fig 139).

13. ***Mount.*** *Explain:* On the command *"Mount"* the detachment get into the vehicle and occupy the positions shown in Fig 138.

Handling the Firing Post and MIRA

14. ***Removing the Firing Post.*** *Explain and demonstrate:* It is the duty of the No. 2 to fit and remove the firing post and pass it over the lowered tailboard to the DC/No. 1. To remove the firing post from the bracket, unlock and fully withdraw the locking arm and lift the firing post clear.

15. ***Replacing the Firing Post.*** *Explain and demonstrate:* To fit the firing post ensure that the bracket locking arm is unlocked and withdrawn. Position the firing post in the bracket with the carrying handle up against its support, the support assembly fully forward in its trough and the front leg clamp on the locking arm engaged over the front leg. Push in on the locking arm (adjust the position of the front leg if necessary by turning the elevation handgrip), ensure that the sling is not fouling the fitment and lock the locking arm.

Handling the Ammunition

16. ***Taking Out and Replacing the Ammunition.*** *Explain and demonstrate:* The vehicle and trailer carries a total of 17 ammunition tubes. Eight ammunition tubes are carried in the trailer (inside logistic containers). The remaining nine ammunition tubes are carried in the ammunition rack and are held secure by locking crossbars.

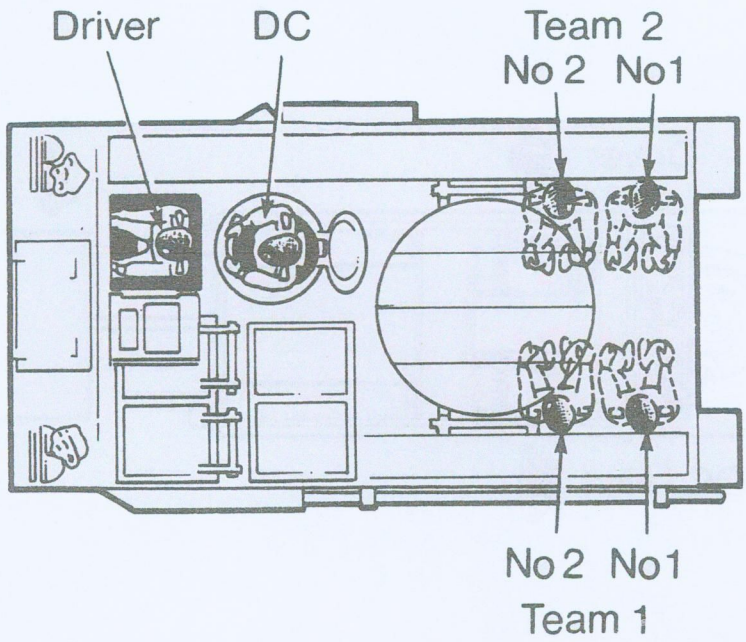

Fig 136. — Positions in the FV 432

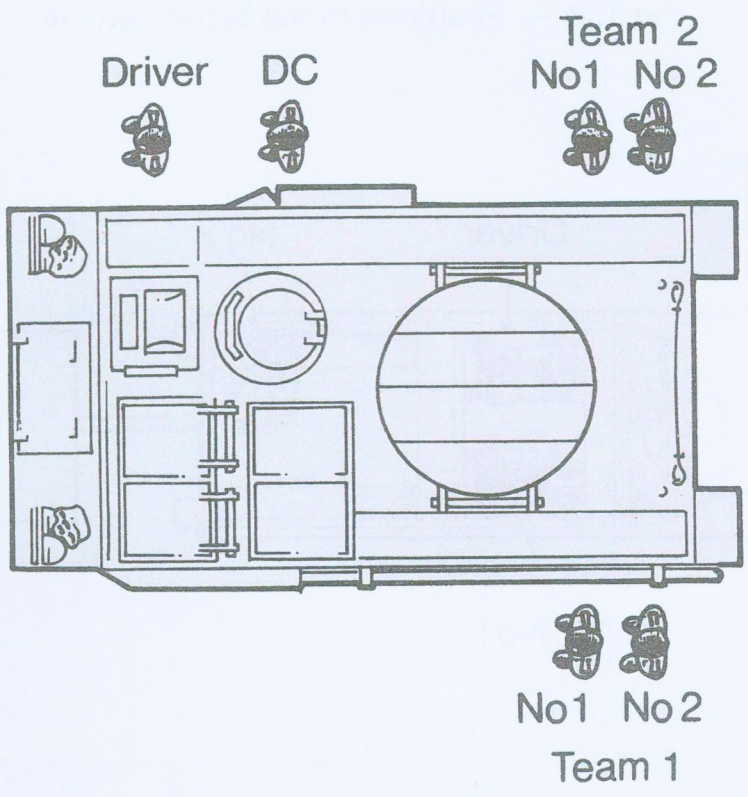

Fig 137. — Fall in Positions, FV 432

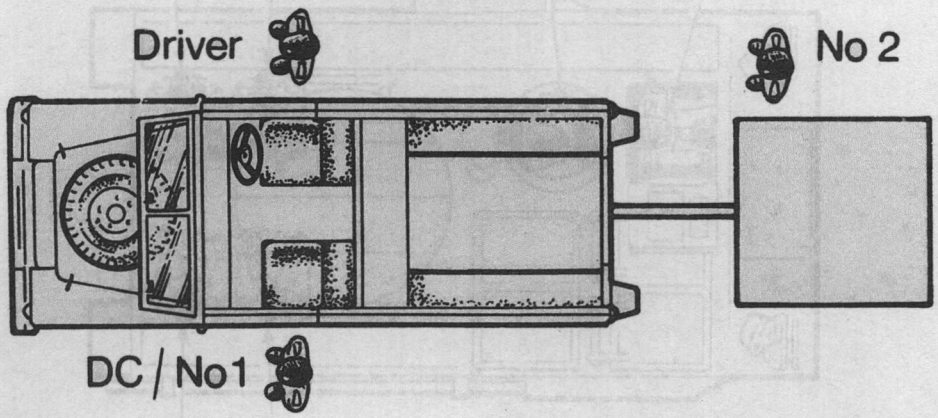

Fig 138. — Positions in the ¾ ton Vehicle

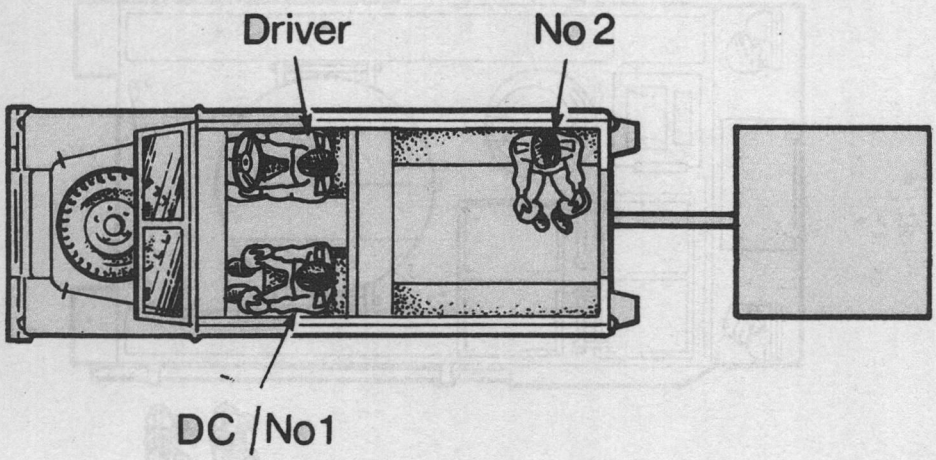

Fig 139. — Fall in Positions, ¾ ton Vehicle

ANNEX D

ANNUAL WEAPON TESTS

Introduction

1. The purpose of these tests is to measure the standard of safety and handling with the MILAN MRATGW so that instructors can monitor progress during training and assess standards within their platoon.

2. Standards should be measured:

   a. At appropriate stages during initial training.

   b. On completion of initial training.

   c. Annually in all platoons.

   d. Prior to live firing.

3. Results achieved are to be recorded on individual training record cards.

Tests

4. The tests are divided into three categories as follows:

   a. Tests 1–6 Maintenance.

   b. Tests 7–11 Drills.

   c. Test 12 Simulated Firings.

Definition of Standards

5. **a.** Skilled — Pass in Test 2 and Skilled Standard in all other tests (to be achieved by all personnel who deploy with a firing post).

   b. Average — Pass in Test 2 and a minimum of Average in all other tests (to be achieved by all other members of the platoon).

   c. Fail — Fail in one or more tests.

Details of the Tests

6. Full details of the tests are to be found at Appendix 1.

7. Full details of the simulated firings to be used in Test 12 are found at Appendix 2.

APPENDIX 1 TO ANNEX D

DETAILS OF TESTS

Test No.	Subject	Stores	Conditions	Marking
1	Service-ability of the firing post	Firing post	Order the soldier to inspect the firing post for service-ability. The soldier is to inspect the following: **a.** Tripod legs and clamp levers. **b.** Rotation of the firing post. **c.** Elevation of the firing post. **d.** Day/night switch and reticle illumination. **e.** Guidance electronics pack male connector. **f.** Support assembly locking devices. **g.** Electrical connection, guidance electronics pack to tracker. **h.** Safety flap and firing button. **i.** Focussing. **j.** Generally for damage.	No time limit. HPS: 40. Deduct 4 marks for each inspection not carried out correctly. Skilled: 36–40. Average: 24–32. Fail: Below 24.

Test No.	Subject	Stores	Conditions	Marking
2	Self testing and testing the firing post	Firing post Unit tester	Before the test begins the 'Day/Night' switch is to be set to 'Night' and the collimator put out of adjustment and focus. Order the soldier to test the firing post. On completion order the soldier to dismantle the equipment.	No time limit. Fail: If any mistakes are made which produce a 'No go' result.
3	Serviceability of MIRA	MIRA equipment complete	Order the soldier to inspect the MIRA and its equipment for safety and serviceability. The soldier is to inspect the following: MIRA **a.** Protective covers. **b.** Gathering Lens. **c.** Daylight filter and visible light entry window. Rubber bung. **d.** Guide ribs and Machined Tunnel. **e.** Battery housing. **f.** Bottle housing. **g.** Master switch. **h.** Control panel. **i.** Generally for damage.	No time limit. HPS: 30. Deduct 2 marks for each inspection not carried out correctly. Deduct 5 marks if any of the safety precautions are not carried out correctly. Skilled: 30. Average: 26–28. Fail: Below 26.

Test No.	Subject	Stores	Conditions	Marking
3 cont			Mounting Bracket **a.** Plastic studs. **b.** Securing device. **c.** Forward and rear looking devices. **d.** Elevation and Azimuth adjusters. Air Bottle. Carry out the normal safety precautions. Battery Carry out the normal safety precautions.	
4	Harmonization Harmonizing target	 Firing post Sighting gauge Harmonizing target 50 metre lens	This test can be carried out using either a DAP or the harmonizing target. Order the soldier to check harmonization of the firing post using the harmonizing target.	 No time limit. HPS: 5. Deduct one mark for each mistake. Skilled: 5. Average: 4. Fail: Below 4 or if an incorrect result is given.
4a	DAP	Firing post Sighting gauge	Indicate a DAP to the soldier and order him to check harmonization of the firing post using the DAP.	No time limit. HPS: 5. Deduct one mark for each mistake. Skilled: 5. Average: 4. Fail: Below 4 or if an incorrect result is given.

Test No.	Subject	Stores	Conditions	Marking
5	Harmonization MIRA	Firing post MIRA complete	Indicate a DAP to the soldier then order him to check the harmonization of MIRA.	No time limit. HPS: 6. Deduct one mark for each mistake. Skilled: 5–6. Average: 4. Fail: Below 4 or if an incorrect result is given.
6	Serviceability of the ammunition	One instructional tube prepared for firing	Order the soldier to inspect the ammunition for operational serviceability. The soldier is to inspect the following: **a.** Membrane. **b.** Junction box spring clip. **c.** Guidance wire. **d.** Junction box retaining pins. **e.** Female electrical socket. **f.** Guide ribs and latch recess. **g.** Junction box six pin plug. **h.** Gas generator ignition wire. **i.** Complete tube.	No time limit. HPS: 18. Deduct 2 marks for each inspection not carried out correctly. Skilled: 18. Average: 14–16. Fail: Below 14.

Test No.	Subject	Stores	Conditions	Marking
7	Action, DC's/No. 1's duties	Firing post MIRA complete Two drill ammunition tubes Stop watch	The DC/No. 1 is to start the test with the mounting bracket fitted to the firing post and the firing post slung on his shoulder with the tripod legs folded. The MIRA is to have a bottle and battery fitted and is to be carried inside its carry-bag. Indicate an arc of fire and a fire position ten metres from the start point. Order *"Action"*. The time is taken from the command *"Action"* until the firing post is correctly positioned with MIRA fitted and correctly conditioned and the No. 1 in his action position with the firing post loaded.	Skilled: 60 seconds or below. Average: 60–70 seconds. Fail: Over 70 seconds or if any error of drill affects safety. Add 5 seconds to the overall time for each error of drill.
7a	Action, No. 2's duties	As for test No. 7	This test is to run concurrently with test No. 7. The No. 2 is to carry two ammunition tubes. The conditions are the same as for test No. 7. The timing stops when the No. 2 is in his action position with the second ammunition tube prepared for loading.	Skilled: 35 seconds or below. Average: 36–45 seconds. Fail: Over 45 seconds or if any error of drill affects safety. Add 5 seconds to the overall time for each error of drill.

Test No.	Subject	Stores	Conditions	Marking
7a cont			If the DC/No. 1 is slow at completing his duties, the No. 2 is not to be penalized because of it. The test should be retaken with a skilled DC/No. 1.	
8	Stand clear, DC's/No. 1's duties	As for test No. 7	Remind the DC/No. 1 of the state of the firing post. Give the command *"Get your team away from the firing post"*. The time starts after the words *"firing post"* and ends, once the team is stood to attention behind the firing post.	Skilled: 12 seconds. Average: 13–16 seconds. Fail: Over 16 seconds or if any error of drill affects safety. Add 5 seconds to the overall time for each error of drill.
8a	Stand clear, No. 2's duties	As for test No. 7	The conditions of this test are as for test No. 8 and it is to run concurrently with that test. The time starts from the DC/No. 1 ordering *"Unload"* and ends, once the team is stood to attention behind the firing post.	Skilled: 25 seconds. Average: 26–35 seconds. Fail: Above 35 seconds. Add 5 seconds to the overall time for each error of drill.
9	Take post, DC's/No. 1's duties	As for test No. 7	The DC/No. 1 starts the test from behind the firing post. Remind him that the MIRA is fitted. Order *"Take post"*. The time is taken from *"Take post"* until the	Skilled: 10 seconds. Average: 11–20 seconds. Fail: Over 20 seconds or if any error of drill affects safety.

Test No.	Subject	Stores	Conditions	Marking
9 cont			DC/No. 1 is correctly positioned at the firing post.	Add 5 seconds to the overall time for each error of drill.
9a	Take post, No. 2's duties	As for test No. 7	This test is to run concurrently with test No. 9. The conditions and timings for this test are the same as for test No. 9.	Skilled: 18 seconds. Average: 18–26 seconds. Fail: Above 26 seconds or if any error of drill affects safety. Add 5 seconds to the overall time for each error of drill.
10	Firing, misfire and in flight failure drills, DC's/No. 1's duties	Firing post Two drill ammunition tubes Stop watch Three representative tank targets	Explain to the team that they are on 'Active Service'. Indicate the target to be engaged. When the DC/No. 1 puts the safety flap to fire order *"Engage"*. When the firing button is pressed order *"Fired"*. *"Tracking"* then *"Impact"*. After the No. 2 has reported *"Loaded"* Indicate another target to be engaged. When the firing button is pressed order *"Fired"* *"Fails to appear"* or *"Fired"* *"Tracking"* then *"Disappears"*. When the No. 2 reports *"Loaded"* indicate another target to be engaged.	No time limit. HPS: 20. Deduct one mark for each error of drill. Deduct 5 marks if the error affects safety. Skilled: 18–20. Average: 16–17. Fail: Below 16.

Test No.	Subject	Stores	Conditions	Marking
10 cont			When the firing button is pressed order *"Not fired"*. Thereafter order *"Not fired"* each time the firing button is pressed.	
10a	In flight failure drill, No. 2's duties	As for test No. 10	This test is to run concurrently with test No. 10. The test is timed from the order *"Cut"* being given by the DC/No. 1 until the No. 2 reports *"Loaded"*.	Skilled: 8 seconds. Average: 9–12 seconds. Fail: Above 12 seconds or if any error of drill affects safety. Add 2 seconds to the overall time for each error of drill.
10b	Misfire drill, No. 2's duties	As for test No. 10	This test is to run concurrently with test No. 10. The test is timed from the order *"Misfire"* being given by the DC/No. 1 until the No. 2 reports *"Loaded"*.	Skilled: 10 seconds. Average: 11-14 seconds. Fail: Above 14 seconds or if any error of drill affects safety. Add 2 seconds to the overall time for each error of drill.
11	Cease firing drill, DC's/No. 1's duties	As for test No. 7	Remind the team of the state of the firing post. Order *"Cease firing"*. Take the time from *"Cease firing"* until the DC/No. 1 has returned to the start point (ten metres from the firing position). The tripod legs are to be	Skilled: 45 seconds. Average: 46–50 seconds. Fail: Above 50 seconds or if any error of drill affects safety. Add 2 seconds to the overall time for each error of drill.

Test No.	Subject	Stores	Conditions	Marking
11 cont			folded and the firing post slung on the shoulder. The MIRA is to be carried in its carrying bag. If the No. 2 is slow in unloading the DC/No. 1 is not to be penalized because of it. The test should be retaken with a skilled No. 2 as an assistant.	
11a	Cease firing drill, No. 2's duties	As for test No. 7	This test is to run concurrently with test No. 11. The time is taken from the DC/No. 1 ordering *"Unload"* until the No. 2 has returned to the start point with his two ammunition tubes and all the covers are replaced. If the DC/No. 1 is slow to order *"Cease firing"* the No. 2 is not to be penalized because of it. The test should be retaken using a skilled DC/No. 1 as an assistant.	Skilled: 38 seconds. Average: 39–48 seconds. Fail: Above 48 seconds or if any error of drill affects safety. Add 5 seconds to the overall time for each error of drill.
12	Simulated firing	Firing post Simulator Representative tank target Decoy source	The instructor is to set up and condition the simulator for fictive target. Each soldier is to be allowed one shot to adjust the fictive target for	No time limit. HPS: 11. Skilled: 10–11. Average: 7–9. Fail: Below 7.

Test No.	Subject	Stores	Conditions	Marking
12 cont			brightness. Each shot is to be explained to the soldier in terms of speed and direction before he fires. Scoring to be taken only from the monitor. The simulated firings for this test are listed in Appendix 2.	Deduct one point per miss or incorrect firing.

TEST 12. — SIMULATED FIRINGS

Serial	No. of Shots	Target	Smoke	Range	Sight Control Unit Settings					Target Description and Speed	
					Monitor	Target Speed		Offsets			
						El	Az	El	Az	Type	km/h
1	1	Fictive	—	1000	Whole Trajectory	0	R 4.9	2.5	2.5	→	15
2	1	Fictive	—	2000	Whole Trajectory	D 1.0	L 3.5	2.0	2.5	↙	25
3	1	Fictive	—	750	Whole Trajectory	U 1.0	R 11.0	2.0	2.0	↗	25
4	1	Fictive	—	1500	Whole Trajectory	U 1.0	L 6.0	2.0	2.0	↖	30
5	1	Fictive	—	1000	Whole Trajectory	0	R 10.0	1.5	2.0	→	35
6	1	Fictive	—	1500	Whole Trajectory	D 3.0	.0	1.5	1.5	↓	15
7	1	Fictive	—	750	Whole Trajectory	U 4.0	0	1.5	1.5	↑	10
8	1	Fictive	—	1000	Whole Trajectory	D 2.0	R 4.0	1.0	1.5	↘	15

Serial	No. of Shots	Target	Smoke	Range	Sight Control Unit Settings					Target Description and Speed	
					Monitor	Target Speed		Offsets			
						El	Az	El	Az	Type	km/h
9	1	Fictive	—	750	Whole Trajectory	D 2.0	L 9.0	1.5	1.0	↙	20
10	1	Fictive	—	500	Whole Trajectory	U 2.0	R 8.0	1.0	1.0	↗	15
11*	1	Spot	—	1300	Last 200	—	—	1.0	1.0	Static	

Serial 12 MIRA. To be published.

*For Serial 11, position a representative tank target forward of the simulator and lay the cross hairs of the tracker onto the target; position a decoy source in the area of the target ensuring that it does not appear within the 20 mil circle but appears within the 80 mil sensing field. Order the soldier to engage the target.

RESTRICTED

ANNEX E

SERVICING SCHEDULE, UNIT TEST EQUIPMENT

Introduction

1. The purpose of maintenance is to minimize the possibility of the unit tester and harmonizing kit becoming unserviceable through lack of care and inspection. Providing the equipment is frequently inspected and serviced small faults can be found and rectified before an accumulation of faults leads to the equipment becoming unserviceable.

Occasions

2. To ensure that the equipment functions correctly when required to do so, it must be inspected and serviced on the following occasions:

a. Before range firings.

b. Before deployment on operations.

c. At least weekly on operations.

d. Immediately following a long period of transit.

e. At any other time considered necessary.

Inspection

3. Listed below are the components that must be inspected. This list should be referred to when inspecting the equipments to ensure that nothing is missed. Should any faults be found, they must be reported to the unit REME for rectification unless the repair is a user responsibility as indicated in the check lists below by an asterisk. The components listed are those for the Unit Tester Mk 2. Units holding the Mk 1 tester are to inspect the equivalent components.

a. *Unit Tester.*

Serial	Component	Result	User Repair
1	Lid quick release catches.	Secure and undamaged.	
2	Carrying handles.	Secure and fold flat.	

Serial	Component	Result	User Repair
3	Unit tester body.	No dents or cracks.	
4	Shock absorbers.	Present and intact.	
5	Battery pack quick release catches.	Undamaged and operate smoothly.	
6	Working face.	All markings legible.	*
7	Collimator and junction box straps.	Undamaged and fittings not corroded.	
8	Junction box latch.	Depresses and reasserts itself smoothly.	*
9	Transparent display windows.	Undamaged and clean.	
10	'On' button.	Operates smoothly.	
11	'On' button rubber cover.	Undamaged and secure.	
12	Selector switches.	Undamaged and correctly set.	
13	External power supply. socket.	Dust cover and chain undamaged.	
14	Fuze.	Fuze in position and cap undamaged.	
15	Ball lugs.	No play, clean and undamaged.	
16	Accessory pack.	Complete.	*
17	Accessory spring clip.	Secure and undamaged.	*
18	Junction Box.	Flanges undamaged. Male connector clean and undamaged. Self test socket undamaged. Cable undamaged and secure.	

Serial	Component	Result	User Repair
19	Collimator.	Lenses clean (remove diaphragm if necessary, *see* paragraph 5.c.).	
20	Collimator body.	Undamaged.	
21	Collimator brackets.	Rubber inserts supple.	
22	Cables.	Clean, undamaged and secured to the working face.	
23	Female electrical socket.	Clean and operates smoothly.	
24	Battery charging socket.	Dust cover secure and chain intact.	
25	General.	Self tests correctly. No trace of corrosion.	*

b. *Sighting Gauge.*

Serial	Component	Result	User Repair
1	Protective case.	No distortions, clean and undamaged.	
2	Quick release catches.	Secure and operate smoothly.	
3	50 metre lenses.	Clean and unscratched.	*
4	Flanges.	Undamaged.	
5	Lens.	Clean and undamaged.	*
6	Focussing ring.	Operates correctly.	

c. *Harmonizing Target.*

Serial	Component	Result	User Repair
1	Legs.	Not bent.	
2	Screw clamps.	Operate correctly.	
3	Markings.	Clear and in good condition.	
4	Levelling bubble.	In working order.	

Servicing

4. Whilst servicing the equipment, it is important that only the cleaning materials listed are used. Failure to do this could result in damage to the equipment, particularly the lenses. The cleaning materials required are:

a. Duster.

b. Fluff-free rag.

c. Lens cleaning brush and cloth/paper.

d. Nylon brush.

e. Paint and paint brush (if necessary).

f. White spirit.

g. Oil.

5. ***Unit Tester.***

a. *Overall.*

(1) Using a rag, remove the dust and loose traces of mud, taking care not to damage the paint finish.

(2) Caked-on mud can be removed using a damp rag.

(3) Any grease spots can be removed using white spirit.

b. *Electrical Connections.*

(1) If necessary, clean both male and female sockets by brushing the sockets with a nylon brush that has been dipped in white spirit.

(2) Providing that connections are always made and that dust covers are used it should very rarely be necessary to clean the electrical connections.

c. *Lenses.*

(1) Clean the lenses of the collimator by removing the diaphragm and using a lens brush and lens cloth. Care should be taken to ensure that the lens cloth is free from grit and abrasive particles. To remove the diaphragm, compress the ends of the diaphragm extractor tool and insert them into the two holes in the diaphragm gun and pull upwards. To replace, push downwards until the spring loaded bearings engage. Remove the tool if used.

(2) Using a soft fluff-free rag clean the display windows on the working face.

d. *General.*

(1) Clean the rubber insert around the working face with a lightly damped cloth (if necessary).

(2) Recharge the batteries only when necessary, as systematic charging will shorten life expectancy.

6. ***Sighting Gauge.***

a. *General.* A thin film of oil should be maintained over the body of the sighting gauge. Care must be taken to ensure that no oil gets on the lenses.

b. *Lenses.* The optical sight and 50 metre lenses must be cleaned using only the lens cleaning brush and lens cleaning cloth/paper.

7. ***Harmonizing Target.***

a. The frame should be wiped down, using a clean damp cloth. Care must be taken not to damage the paint work. If damaged the paint work should be touched up using the appropriate colour paint.

b. The levelling bubble can be cleaned using lens cleaning materials.

8. ***50 Metre Tape.*** In order to keep the tape free from rust, a light coat of oil should be applied.

Summary

9. Systematic servicing and inspection of the equipment will increase its reliability and thus the combat readiness of the Platoon.

ANNEX F

ADDITIONAL INFORMATION — THEORY OF THERMAL IMAGERY

Introduction

1. This information is provided for the instructor as a background to Lesson 2.

Electro Magnetic Energy

2. All objects when warm radiate an energy, the hotter an object is the more energy is radiated. This energy is called Electro Magnetic Energy (EME) and it has a wavelength. The wavelength is measured in microns: a micron being one millionth part of a metre. There are different types of EME each with different wavelengths which combined together form the Electro Magnetic Spectrum (EMS) (*see* Fig 140).

Electro Magnetic Spectrum

3. Part of the EMS is already familiar in the form of visible or white light due to the eye being receptive to wavelengths being emitted by such light or EME. What cannot be seen is energy radiated by buildings, trees and vehicles, the eye not being receptive to their particular wavelength. Part of the energy radiated by these objects is infra-red (IR) energy and its wavelength lies below the visible light wavelength but above the bands of radio and radar. The infra-red part of the EMS is split into three parts: Near, Middle and Far infra-red. Maximum strength radiation for objects occurs around the ten micron point which is in the far infra-red band. This bracket is called a Thermal Window.

Thermal Windows

4. The radiated energy that is required by a thermal imager to produce a picture must first pass through the atmosphere. During its passage through the atmosphere some of the radiation is scattered and some absorbed by various objects. There are two areas or thermal windows where scattering and absorption are minimized; the 3–5 micron part and 8–14 micron part of the EMS. All thermal images work in one or the other of these thermal windows.

Emission of Electro Magnetic Radiation

5. The ability to detect EMR depends in part upon the amount being emitted. Emission in turn is dependent on a number of facts as follows:

a. *Temperature.* This is an obvious factor. The hotter an object is then the more EMR is emitted, e.g., an AFV exhaust pipe is hotter than its turret and therefore will be much easier to see.

b. *Thermal Capacity.* All substances have a different chemical composition, e.g., steel is dense where wood is not. This difference in composition governs the ability of the material to absorb, retain and emit EMR. Steel will absorb heat quickly, but will cool rapidly. Wood and foliage are much slower to absorb heat but retain it for much longer periods consequently emitting EMR for longer periods.

c. *Surface Texture and Colour.* When EMR falls on an object some is absorbed and some is reflected. A smooth surfaced object, e.g., an AFV, will reflect more than a rough surfaced object, e.g., a building or hill. Similarly a light coloured surface will reflect more EMR than a very dark coloured surface. MIRA will detect both types of radiation, emitted and reflected. Emitted radiation is always more intense than reflected radiation and therefore easier to see.

d. *Background.* Heat will readily transfer from a warm object to a cooler one, e.g., the hot exhaust pipe of an AFV will transmit heat to the cooler body of the vehicle to which it is attached. As the temperature of both objects, the exhaust pipe and the body, become similar the previous prominent exhaust pipe will 'fade' into the overall image of the vehicle. Similarly, a vehicle under a camouflage net will give up heat to the net. This transference of heat to the net will distort the previously clear picture of the vehicle.

Smoke

6. Man-made smoke (mortar bombs, smoke grenades/generators, etc.), Lesson 2 stated that MIRA is not affected by such smoke. This is so because a smoke particle is many times smaller than eight microns and Electro Magnetic Radiations of this frequency and greater pass through the smoke unhindered. The reversal of this is the case of rain; a rain droplet is many times larger than eight microns thus causing deflection of EMR.

Multi-Band Screening

7. This term applies to a 'Thermal Smoke' so designed as to blot out EMR coming from objects either behind the smoke or in it due to its own heat emissions.

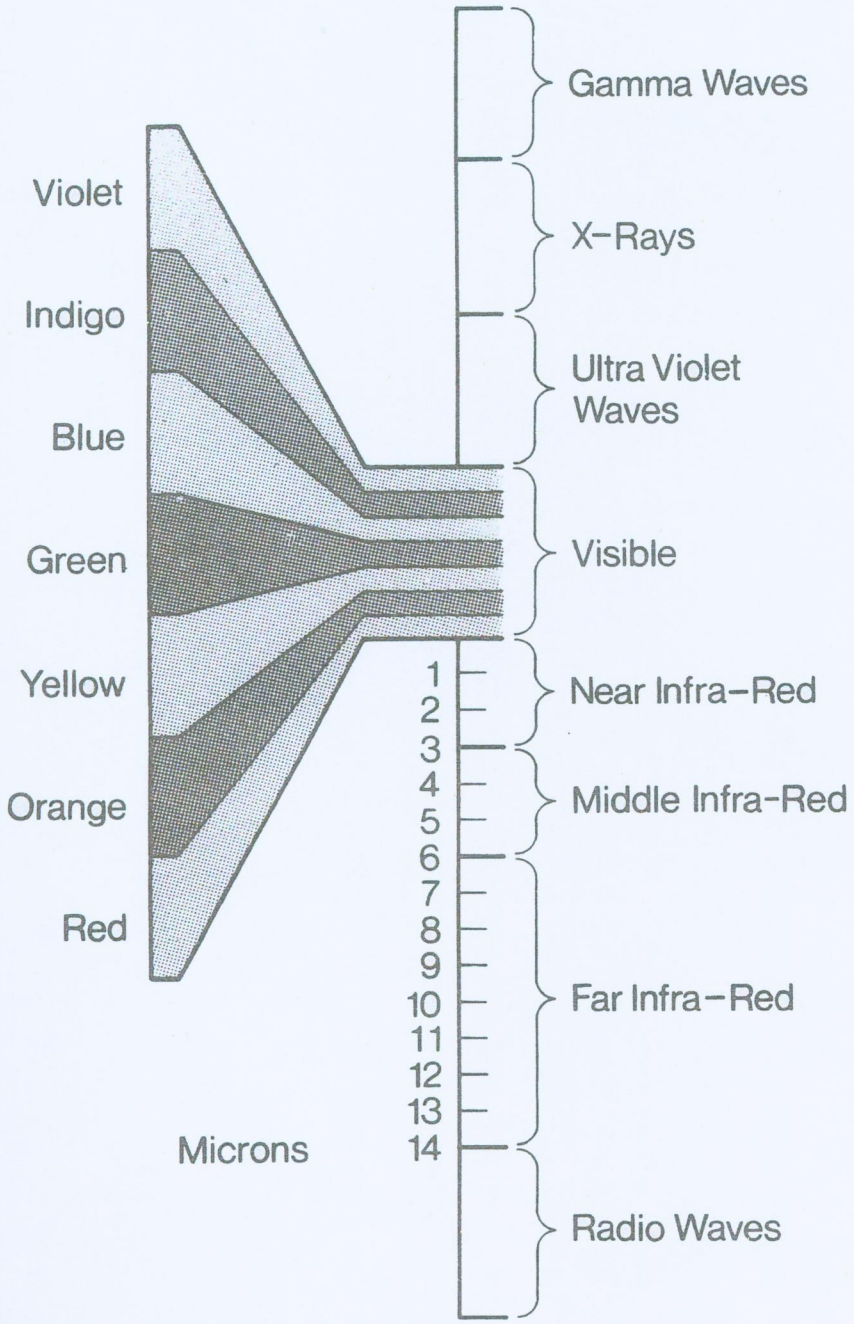

Fig 140. — The Electro Magnetic Spectrum

DESTRUCTION/ABANDONING DRILLS

General

1. When equipment is in imminent danger of capture, it must be disabled so that the enemy cannot make use of it. The extent of the disablement depends on the chances of recapturing the equipment and how much time is available. Standard procedures are laid down so that the enemy cannot strip some equipments to make others serviceable. All personnel within the platoon are to be aware of these procedures.

Abandoning

2. This case presupposes that there is a reasonable chance of recapturing the equipment and it enables it to be brought into action again easily. The team should remove and take with them the following:

a. *Firing Post.*

(1) The cable which connects the guidance electronics pack and the tracker.
(2) The latch from the support assembly.

b. *MIRA.*

(1) Daylight filter.
(2) Guide ribs.
(3) Mounting bracket.

c. *Batteries and Bottles.* Supplies of these should be buried or scattered.

d. *Ammunition.* This can only be permanently disabled — therefore the tactical situation will dictate whether it is to be destroyed or not.

Destruction

3. If the equipment is unlikely to be recaptured or if the team is likely to be taken prisoner while in possession of the removed parts, the equipment must be destroyed as follows:

a. *With Small Arms Fire.*

(1) *Firing Post.*

(a) Fire a round into each of the tracker lenses.
(b) Fire several rounds into both the tracker and the guidance electronics pack.

(2) *MIRA.*

(a) Fire a round into the gathering lens.
(b) Fire several rounds into the body.
(c) Scatter any supply of bottles and batteries.

b. *Without Small Arms Fire.*

(1) *Firing Post.* With any suitable tool smash the tracker lenses and perforate the tracker and guidance electronics pack.
(2) *MIRA.* With any suitable tool smash all lenses and perforate the body. Break off the securing device and rear locking device of the mounting bracket.
(3) *Ammunition.* Puncture the membrane and cut the guidance wire. Cut the gas generator ignition wire and remove the junction box.

4. When destroying the equipment a mixture of Small Arms Fire and other means should be employed.